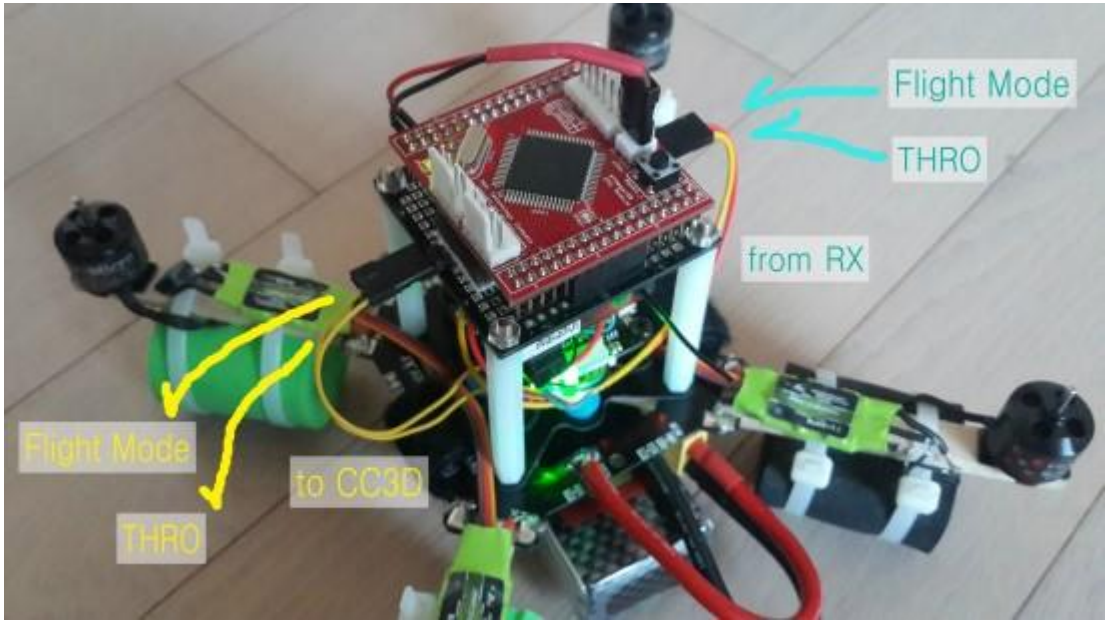
Flight Mode
THRO
from RX
Flight Mode
to CC3D
THRO

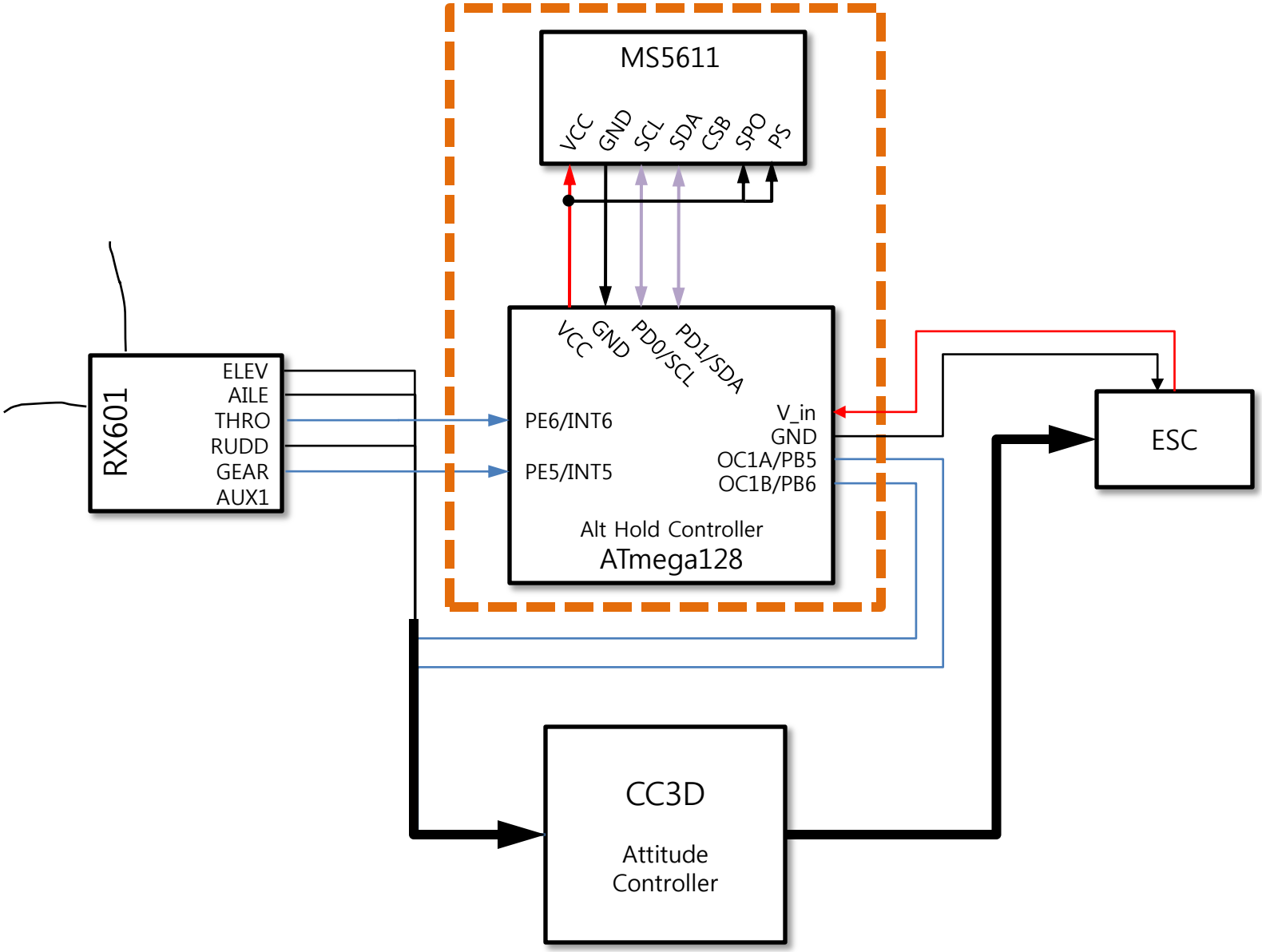
MS5611
VCC
GND
SCL
SDA
CSB
SPO
PS
RX601
ELEV
AILE
THRO
RUDD
GEAR
AUX1
VCC
GND
PD0/SCL
PD1/SDA
PE6/INT6
PE5/INT5
V_in
GND
OC1A/PB5
OC1B/PB6
Alt Hold Controller
ATmega128
ESC
CC3D
Attitude
Controller

Altitude Hold
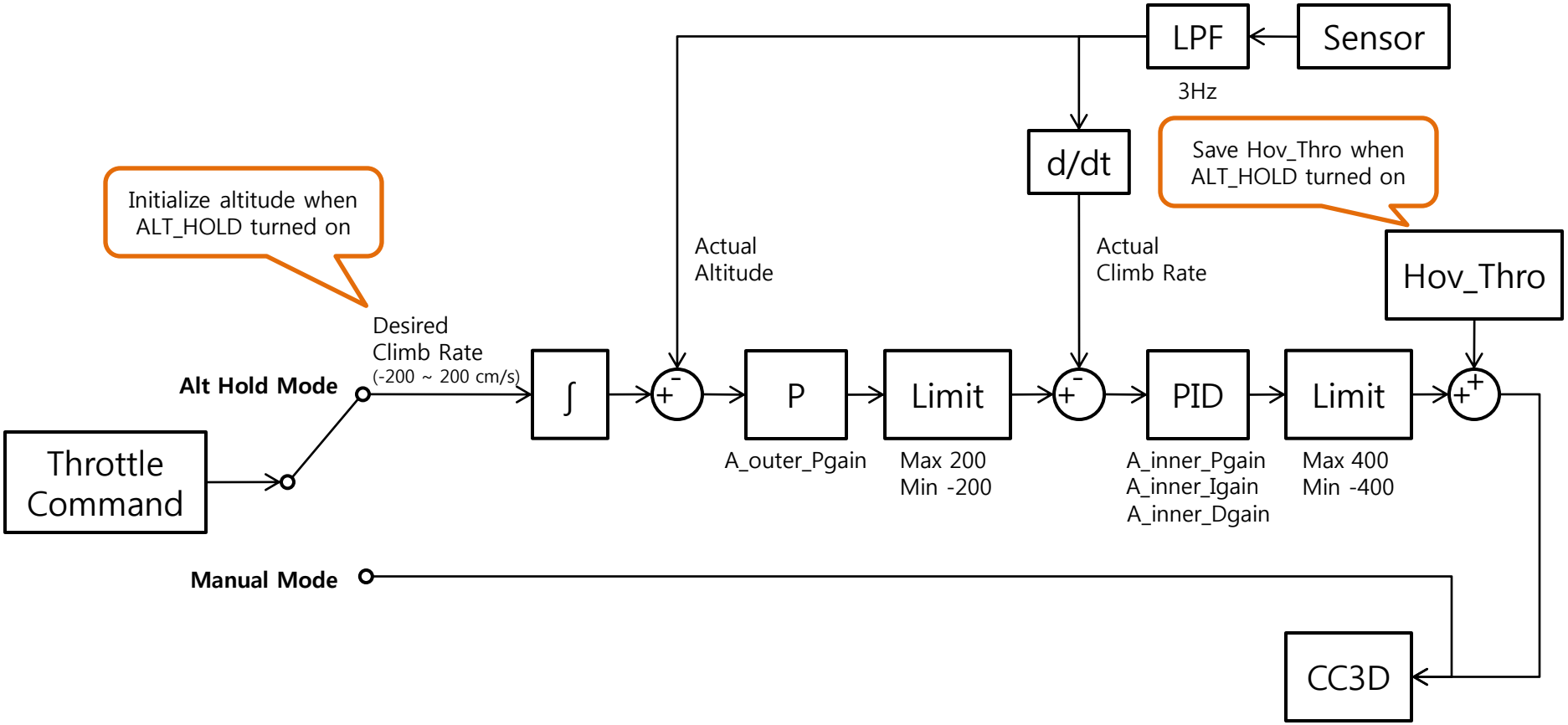
(ATmega128 Update Rate 40Hz)