SUNNYSKY

GREAT PERFORMANCE WITH COMPETITIVE PRICE

Specifications	X4125 KV550			
Stator Diameter	定子外径	41mm		
Stator Thickness	定子厚度	25mm		
No. of Stator Slots	定子槽数	12		
No. of Rotor Poles	转子极数	14		
Motor Kv	电机KV值	550		
No-Load Current (A/10V)	空载电流	2.4A		
Motor Resistance	电机电阻	14mΩ		
Max Continuous Current	最大连续电流	96A/30S		
Max Continuous Power	最大连续功率	2130W		
Weight	重量（含长线）	362g		
Rotor Diameter	转子直径	49.7mm		
Shaft Diameter	出轴直径	6mm		
Body Length	电机长度	54mm		
Overall Shaft Length	电机含轴总长度	75mm		
Max Lipo Cell	最大电池节数	4-6S		
ESC	建议使用电调	80-100A		
Recommended Prop(inch)	推荐螺旋桨规格	14*8	15*8	16*8
		17*10	18*8	

Prop (inch)	Voltage (V)	Current (A)	Thrust (gf)	Power (W)	Efficiency (g/W)	Load temperature in 100% throttle 全油门负载温度
14*8	22.2	2.7	500	59.94	8.341675008	70℃
		4.5	750	99.9	7.507507508	
		6.2	1000	137.64	7.265329846	
		8	1250	177.6	7.038288288	
		10.7	1500	237.54	6.314725941	
		13.2	1750	293.04	5.971880972	
		15.7	2000	348.54	5.738222299	
		19.1	2300	424.02	5.42427244	
		23	2600	510.6	5.09204857	
		29	3000	643.8	4.659832246	
		35.7	3500	792.54	4.416180887	
		44.9	4000	996.78	4.012921608	
		54.2	4500	1203.24	3.739902264	
		64.3	5000	1427.46	3.50272512	
		73.6	5500	1633.92	3.366137877	
15*8	18.5	3.2	500	59.2	8.445945946	62℃
		5.2	750	96.2	7.796257796	
		7	1000	129.5	7.722007722	
		9.3	1250	172.05	7.265329846	
		11.5	1500	212.75	7.05052879	
		14.5	1750	268.25	6.523765144	
		18	2000	333	6.006006006	
		21.6	2300	399.6	5.755755756	
		25.5	2600	471.75	5.511393747	
		31.2	3000	577.2	5.197505198	
		39.6	3500	732.6	4.777504778	
		48.5	4000	897.25	4.458066314	
		58.8	4500	1087.8	4.136789851	
		70	5100	1295	3.938223938	
	22.2	2.7	500	59.94	8.341675008	82℃
		4.3	750	95.46	7.856693903	
		5.7	1000	126.54	7.902639482	
		7.9	1250	175.38	7.127380545	
		10.1	1500	224.22	6.689858175	
		12.2	1750	270.84	6.461379412	
		15.1	2000	335.22	5.966231132	
		17.9	2300	397.38	5.787910816	
		21.5	2600	477.3	5.447307773	
		26.3	3000	583.86	5.138218066	
		33.2	3500	737.04	4.748724628	
		40.7	4000	903.54	4.427031454	
		50	4500	1110	4.054054054	
		58.3	5000	1294.26	3.86321141	
		69	5500	1531.8	3.590547069	
		80	6000	1776	3.378378378	
		92.3	6500	2049.06	3.172186271	
		96	6900	2131.2	3.237612613	
16*8	18.5	2.8	500	51.8	9.652509653	73℃
		4.5	750	83.25	9.009009009	
		6.4	1000	118.4	8.445945946	
		8.6	1250	159.1	7.856693903	
		11.2	1500	207.2	7.239382239	
		13.4	1750	247.9	7.059298104	
		16.3	2000	301.55	6.63239927	
		20	2300	370	6.216216216	
		24	2600	444	5.855855856	
		29.5	3000	545.75	5.497022446	
		37.6	3500	695.6	5.031627372	
		47	4000	869.5	4.600345026	
		55.8	4500	1032.3	4.359197908	
		69.3	5000	1282.05	3.9000039	
		84	5760	1554	3.706563707	
17*8	14.8	3.3	500	48.84	10.23751024	55℃
		5	750	74	10.13513514	
		7.2	1000	106.56	9.384384384	
		9.8	1250	145.04	8.61831219	
		12.6	1500	186.48	8.043758044	
		15.7	1750	232.36	7.531416767	
		19.4	2000	287.12	6.965728615	
		23.6	2300	349.28	6.584974805	
		28.3	2600	418.84	6.207621049	
		36.2	3000	535.76	5.599522174	
		44.2	3500	654.16	5.350372997	
		55.4	4000	819.92	4.878524734	
		68.2	4600	1009.36	4.557343267	
18*8	14.8	2.8	500	41.44	12.06563707	63℃
		4.7	750	69.56	10.78205865	
		7.1	1000	105.08	9.516558812	
		9.3	1250	137.64	9.081662307	
		12.2	1500	180.56	8.307487816	
		15	1750	222	7.882882883	
		18.2	2000	269.36	7.425007425	
		22.5	2300	333	6.906906907	
		26.8	2600	396.64	6.555062525	
		33.4	3000	494.32	6.068943195	
		44.9	3500	664.52	5.26695961	
		56	4000	828.8	4.826254826	
		68.3	4600	1010.84	4.550670729	
		75.2	4860	1112.96	4.366733755	

Notes: The test condition of temperature is motor surface temperature in 100% throttle while the motor run 10 min.

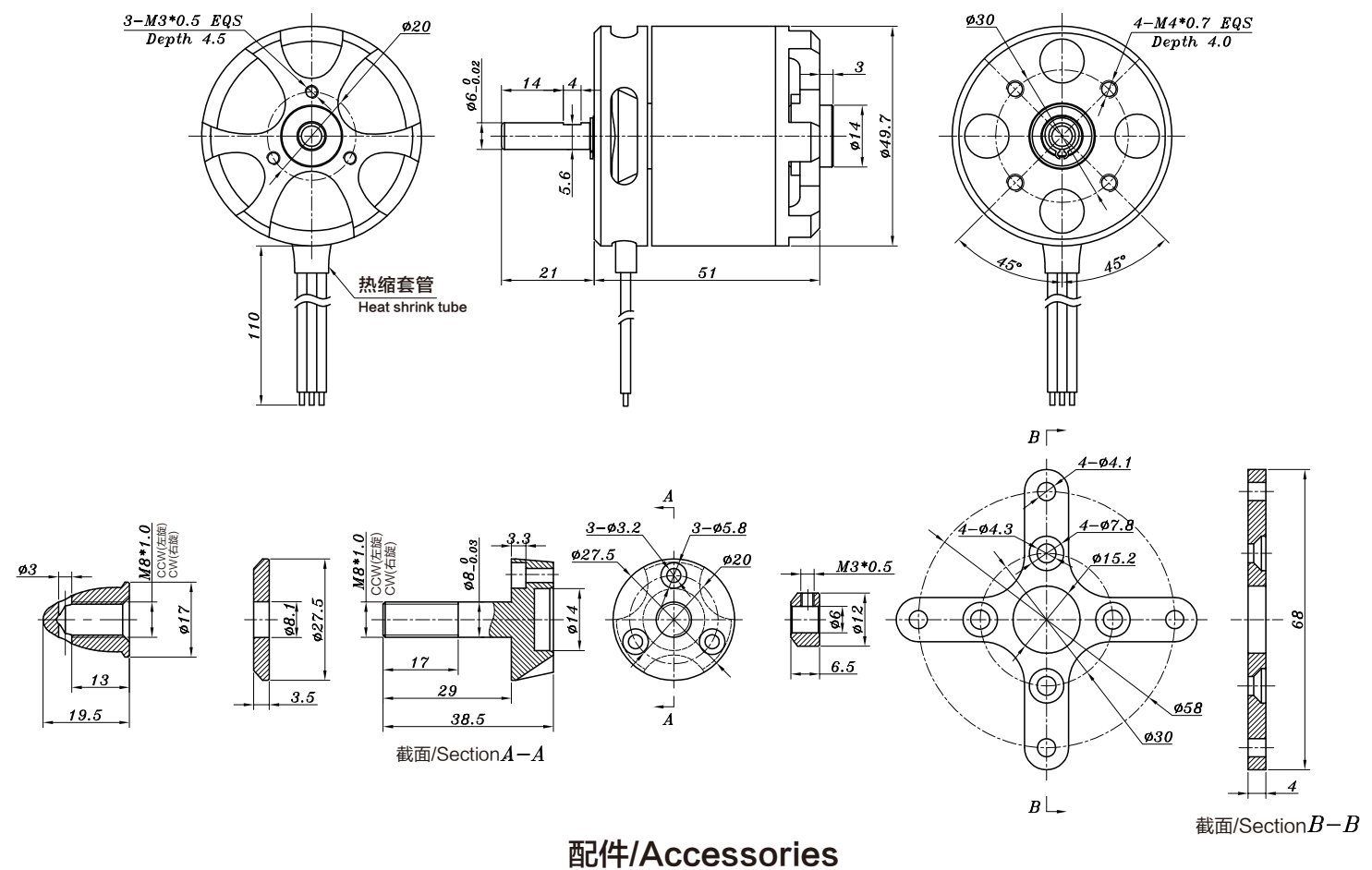

配件/Accessories