XP8103

THE

AIRCRAFT SYSTEM - AIRPLANE MODE

ULTIMATE

HELICOPTER SYSTEM - HELICOPTER MODE

RADIO CONTROL

AIRCRAFT SYSTEM - GLIDER MODE

SYSTEM

8 CHANNELS 10 MODEL MEMORY 3 MODEL TYPE S • Z PCM/PPM SELECTABLE

JR feel the difference!

USER MANUAL

XP8103 1-2-3 Programming

System Set-Up Mode

1. 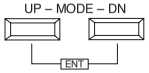

Push these two buttons simultaneously and hold.

2.

Turn the power switch ON (up).

3. 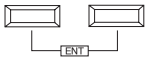

Scroll through options using one of these buttons.

Airplane Mode

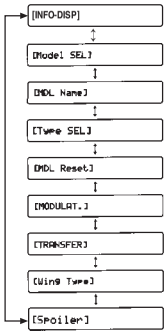

[INFO-DISP]	Pg. 28	Information Display
[Model SEL]	Pg. 29	Model Select and Copy
[MDL Name]	Pg. 29	Model Name Input
[Type SEL]	Pg. 30	Model Type Selection Function
[MDL Reset]	Pg. 30	Data Reset
[MODULAT.]	Pg. 31	Modulation Selection
[TRANSFER]	Pg. 32	Data Transfer between traqnsmitters
[Wing Type]	Pg. 34	Wing Type Selection
[Spoiler]	Pg. 35	Spoiler Channel Input Selection

Helicopter Mode

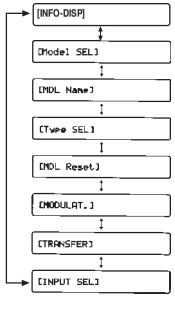

[INFO-DISP]	Pg. 66	Information Display
[Model SEL]	Pg. 66	Model Selection and Copy Function
[MDL Name]	Pg. 67	Model Name Input
[Type SEL]	Pg. 68	Model Type Selection
[MDL Reset]	Pg. 68	Data Reset
[MODULAT.]	Pg. 69	Modulation Selection
[TRANSFER]	Pg. 70	Data Transfer
[INPUT SEL]	Pg. 72	Aux 2, channels can be used for gyro sensitivity adjustment

Glider Mode

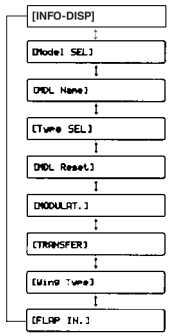

[INFO-DISP]	Pg. 106	Information Display
[Model SEL]	Pg. 106	Model Select And Copy Function
[MDL Name]	Pg. 107	Model Name Input
[Type SEL]	Pg. 108	Model Type Selection Function
[MDL Reset]	Pg. 108	Data Reset
[MODULAT.]	Pg. 109	Modulation Selection
[TRANSFER]	Pg. 110	Model Data Transfer
[Wing Type]	Pg. 112	Wing Type Selection
[FLAP IN.]	Pg.112	Flap Channel Input Selection

Function Mode

1.

Turn the power switch ON (up).

2. 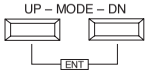

Push these two buttons simultaneously.

3. 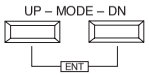

Scroll through the functions using one of these buttons.

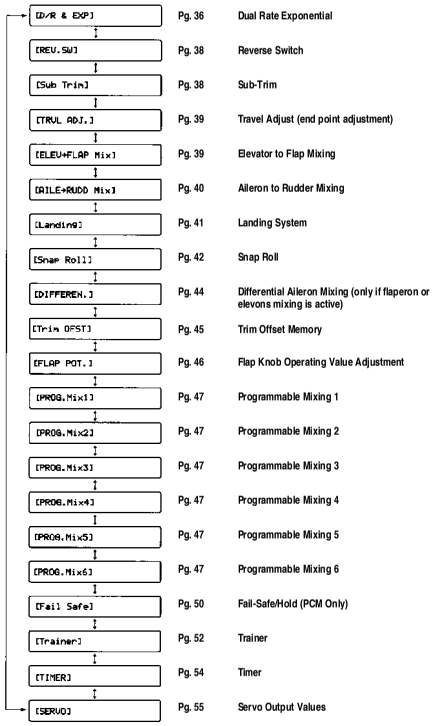

[D/R & EXP]	Pg. 36	Dual Rate Exponential
[REV.SW]	Pg. 38	Reverse Switch
[Sub Trim]	Pg. 38	Sub-Trim
[TRVL ADJ.]	Pg. 39	Travel Adjust (end point adjustment)
[ELEV+FLAP Mix]	Pg. 39	Elevator to Flap Mixing
[AILE+RUDD Mix]	Pg. 40	Aileron to Rudder Mixing
[Landing]	Pg. 41	Landing System
[Snap Roll]	Pg. 42	Snap Roll
[DIFFEREN.]	Pg. 44	Differential Aileron Mixing (only if flaperon or elevons mixing is active)
[Trim OFST]	Pg. 45	Trim Offset Memory
[FLAP POT.]	Pg. 46	Flap Knob Operating Value Adjustment
[PROG.Mix1]	Pg. 47	Programmable Mixing 1
[PROG.Mix2]	Pg. 47	Programmable Mixing 2
[PROG.Mix3]	Pg. 47	Programmable Mixing 3
[PROG.Mix4]	Pg. 47	Programmable Mixing 4
[PROG.Mix5]	Pg. 47	Programmable Mixing 5
[PROG.Mix6]	Pg. 47	Programmable Mixing 6
[Fail Safe]	Pg. 50	Fail-Safe/Hold (PCM Only)
[Trainer]	Pg. 52	Trainer
[TIMER]	Pg. 54	Timer
[SERVO]	Pg. 55	Servo Output Values

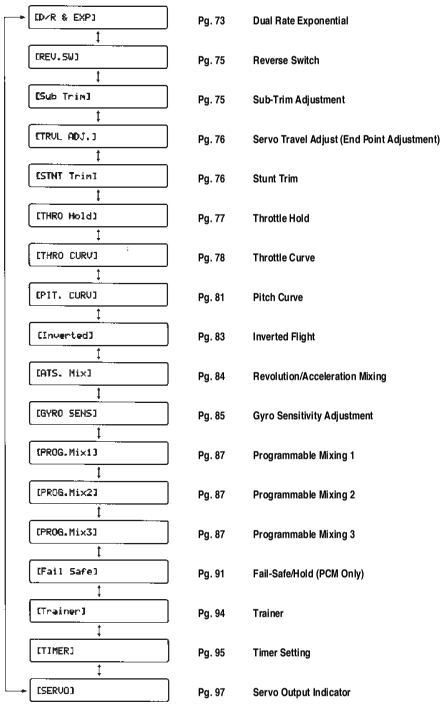

[D/R & EXP]	Pg. 73	Dual Rate Exponential
[REV.SW]	Pg. 75	Reverse Switch
[Sub Trim]	Pg. 75	Sub-Trim Adjustment
[TRVL ADJ.]	Pg. 76	Servo Travel Adjust (End Point Adjustment)
[STNT Trim]	Pg. 76	Stunt Trim
[THRO Hold]	Pg. 77	Throttle Hold
[THRO CURV]	Pg. 78	Throttle Curve
[PIT. CURV]	Pg. 81	Pitch Curve
[Inverted]	Pg. 83	Inverted Flight
[ATS. Mix]	Pg. 84	Revolution/Acceleration Mixing
[GYRO SENS]	Pg. 85	Gyro Sensitivity Adjustment
[PROG.Mix1]	Pg. 87	Programmable Mixing 1
[PROG.Mix2]	Pg. 87	Programmable Mixing 2
[PROG.Mix3]	Pg. 87	Programmable Mixing 3
[Fail Safe]	Pg. 91	Fail-Safe/Hold (PCM Only)
[Trainer]	Pg. 94	Trainer
[TIMER]	Pg. 95	Timer Setting
[SERVO]	Pg. 97	Servo Output Indicator

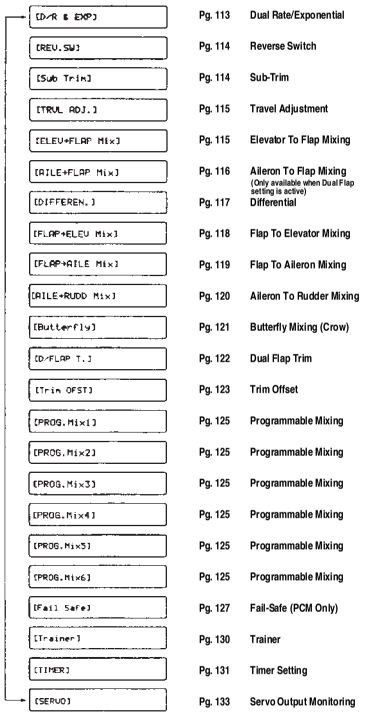

[D/R & EXP]	Pg. 113	Dual Rate/Exponential
[REV.SW]	Pg. 114	Reverse Switch
[Sub Trim]	Pg. 114	Sub-Trim
[TRVL ADJ.]	Pg. 115	Travel Adjustment
[ELEV+FLAP Mix]	Pg. 115	Elevator To Flap Mixing
[AILE+FLAP Mix]	Pg. 116	Aileron To Flap Mixing (Only available when Dual Flap setting is active)
[DIFFEREN.]	Pg. 117	Differential
[FLAP+ELEV Mix]	Pg. 118	Flap To Elevator Mixing
[FLAP+AILE Mix]	Pg. 119	Flap To Aileron Mixing
[AILE+RUDD Mix]	Pg. 120	Aileron To Rudder Mixing
[Butterfly]	Pg. 121	Butterfly Mixing (Crow)
[D/FLAP T.]	Pg. 122	Dual Flap Trim
[Trim OFST]	Pg. 123	Trim Offset
[PROG.Mix1]	Pg. 125	Programmable Mixing
[PROG.Mix2]	Pg. 125	Programmable Mixing
[PROG.Mix3]	Pg. 125	Programmable Mixing
[PROG.Mix4]	Pg. 125	Programmable Mixing
[PROG.Mix5]	Pg. 125	Programmable Mixing
[PROG.Mix6]	Pg. 125	Programmable Mixing
[Fail Safe]	Pg. 127	Fail-Safe (PCM Only)
[Trainer]	Pg. 130	Trainer
[TIMER]	Pg. 131	Timer Setting
[SERVO]	Pg. 133	Servo Output Monitoring

Table of Contents

1-2-3 Programming Charts 3

Table of Contents 4

I. Introduction

How to Use This Manual 8

2. Features
   - 2.1 Transmitter NETG128FS/ HS Computer. 8
   - 2.2 Receiver 9
   - 2.3 Servo Features. 9

3. Component Specifications
   - 3.1 System Specifications (Air/ Heli). 10
   - 3.2 Transmitter Specifications (Air/ Heli) 10
   - 3.3 Servo Specifications 11
   - 3.4 Receiver Specifications. 11
   - 3.5 Charger Specifications. 11
   - 3.6 Airborne Battery Pack 11

II. Common Features

4. Battery Charging
   - 4.1 Transmitter/ Receiver 14
   - 4.2 Charger 14

5. General Information
   - 5.1 Control Stick Length Adjustment 15
   - 5.2 Control Stick Tension Adjustment 15
   - 5.3 Transmitter Rear. 16
   - 5.4 DSC Cord. 17
   - 5.5 Neck Strap Adjustment 17
   - 5.6 Base Loaded Antenna 17
   - 5.7 Frequency Notes/ Aircraft Only Frequencies. 18
   - 5.8 Lithium Battery Indicator/ Backup Error Display . . . 18
   - 5.9 Screen Contrast Adjustment. 19
   - 5.10 Installation Requirements. 19

III. Airplane Section

1. Transmitter Controls
   - 1.1 Control Identification and Location. 22
     - A. Airplane Version Tx 22
     - B. Heli Mode. 23
     - C. Glider Mode 23
   - 1.2 Connections 24

2. General Information
   - 2.1 Input Key Functions 25
   - 2.2 Normal Display 25

3. System Set-Up Mode Functions
   - 3.1 System Set-Up Mode. 26
   - 3.2 Function Mode. 27
   - 3.3 List Mode 28
   - 3.4 Model Select. 28
   - 3.5 Copy Select Function 29
   - 3.6 Model Names. 29
   - 3.7 Model Type Selection 30
   - 3.8 Data Reset. 30
   - 3.9 Modulation Select. 31
   - 3.10 Data Transfer 32
   - 3.11 Wing Type Selection. 34
   - 3.12 Spoiler Channel Input Selection. 35

4. Function Mode Functions
   - 4.1 Dual Rate, Exponential. 36
   - 4.2 Automatic Dual Rate, Exponential 37
   - 4.3 Reverse Switch. 38
   - 4.4 Sub-Trim Adjustment. 38
   - 4.5 Travel Adjust 39
   - 4.6 Elevator to Flap Mixing 39
   - 4.7 Aileron to Rudder Mixing 40
   - 4.8 Landing System 41
   - 4.9 Snap Roll 42
   - 4.10 Differential Aileron Mixing 44
   - 4.11 Trim Offset Memory 45
   - 4.12 Flap Knob Adjustment 46
   - 4.13 Programmable Mixing 47
   - 4.14 Fail-Safe/ Hold. 50
   - 4.15 Trainer 52
   - 4.16 Timer 54
   - 4.17 Servo Output Indicator. 55

5. XP8103 Data Sheet 56

IV. Helicopter Section

1. Transmitter Controls
   - 1.1 Control Identification and Location. 58
     - A. Helicopter Version Tx. 58
     - B. Airplane Mode 59
     - C. Glider Mode 59
   - 1.2 Switch Warning Safety Feature (Heli Mode) 60
   - 1.3 Connections 60
   - 1.4 Gyro Connections 61

2. General Information
   - 2.1 Input Key Functions 62
   - 2.2 Normal Display 62
   - 2.3 Aux 3 Function (Channel #8) 63

3 System Set-Up Mode Functions
   - 3.1 System Set-Up Mode. 64
   - 3.2 Function Mode. 65
   - 3.3 List Mode 66
   - 3.4 Model Select 66
   - 3.5 Copy Select Function 67
   - 3.6 Model Names 67
   - 3.7 Model Type Selection 68
   - 3.8 Data Reset 68
   - 3.9 Modulation Select 69
   - 3.10 Data Transfer 70
   - 3.11 Input Selection Function 72

4. Function Mode Functions
4.1 Dual Rate, Exponential . . . 73
4.2 Automatic Dual Rate, Exponential . . . 74
4.3 Reverse Switch . . . 75
4.4 Sub-Trim Adjustment . . . 75
4.5 Travel Adjust . . . 76
4.6 Stunt Trim . . . 76
4.7 Throttle Hold . . . 77
4.8 Throttle Curve . . . 78
4.9 Pitch Curve . . . 81
4.10 Inverted Switch . . . 83
4.11 Revolution/ Acceleration Mixing . . . 84
4.12 Gyro Sensitivity Adjustment . . . 85
4.13 Programmable Mixing . . . 87
4.14 Fail-Safe/ Hold . . . 91
4.15 Trainer . . . 94
4.16 Timer . . . 95
4.17 Servo Output Indicator . . . 97

5. XP8103 Data Sheet . . . 98

V. Glider Section

1. Transmitter Controls
1.1 Control Identification and Location . . . 100
A. Glider Mode . . . 100
B. Airplane Mode . . . 101
C. Heli Mode . . . 101
1.2 Connections . . . 102
2. General Information
2.1 Input Key Functions . . . 103
2.2 Normal Display . . . 103

3. System Set-Up Mode Functions
3.1 System Set-Up Mode . . . 104
3.2 Function Mode . . . 105
3.3 List Mode . . . 106
3.4 Model Select . . . 106
3.5 Copy Select Function . . . 107
3.6 Model Names . . . 107
3.7 Model Type Selection . . . 108
3.8 Data Reset . . . 108
3.9 Modulation Select . . . 109
3.10 Data Transfer . . . 110
3.11 Wing Type Selection . . . 112
3.12 Input Selection . . . 112

4. Function Mode Functions
4.1 Dual Rate Exponential . . . 113
4.2 Reverse Switch . . . 114
4.3 Sub-Trim Adjustment . . . 114
4.4 Travel Adjust . . . 115
4.5 Elevator To Flap Mixing . . . 115
4.6 Aileron To Flap Mixing . . . 116
4.7 Differential Aileron Mixing . . . 117
4.8 Flap to Elevator Mixing . . . 118
4.9 Flap to Aileron Mixing . . . 119
4.10 Aileron to Rudder Mixing . . . 120
4.11 Butterfly Mixing (Crow) . . . 121
4.12 Dual Flap Trim . . . 122
4.13 Trim Offset Memory . . . 123
4.14 Programmable Mixing (1-6) . . . 125
4.15 Fail-Safe/ Hold . . . 127
4.16 Trainer . . . 130
4.17 Timer . . . 131
4.18 Servo Output Indicator . . . 133

5. Practical Applications . . . 134
5.1 Setting Up Your Sailplane . . . 134
5.2 Basic Set-Up and Mixing . . . 134
5.3 Launch and Reflex Presets . . . 135
5.4 Landing Mode Program . . . 135
5.5 Full Span/ Variable Crow/ Camber . . . 136
5.6 Special Mixing . . . 136

6. XP8103 Data Sheet . . . 138

V. Important Information for All Versions

1. Servo Precautions . . . 140

2. General Notes . . . 140

3. Federal Aviation Administration . . . 141

4. Daily Flight Checks . . . 141

5. Frequency Chart . . . 142

6. Warranty Information
6.1 Warranty Coverage . . . 143
6.2 Repair Service Directions . . . 143
6.3 Warranty Repairs . . . 143
6.4 Normal Non-Warranty Repairs . . . 144

I. Introduction

1. How To Use This Manual

In the beginning of this manual you will find the specifications for the radio and its various accessories. In addition, guidelines for the initial installation of the accessories have been included.

For your convenience, this manual is arranged with a separate sections for airplane, helicopter and glider software functions:

Airplane Software: Page 21

Helicopter Software: Page 57

Glider Software: Page 99

You will find instructions for setting all of the functions and programs of the XP8103 to suit your personal preferences. These features are discussed in the same order that they appear on your radio, as you will see on the accompanying system function mode programming charts. An explanation of the use and purpose of each feature is provided, followed by a labeled illustration of its respective LCD display.

A blank data sheet has been included at the end of each section. Once all data has been input for a particular model, it is highly recommended that you also record it on a copy of the data sheet provided. If you should experience memory loss or battery failure, or want to make changes to the current settings, this step will save you a great deal of time. In the back of this manual you will find information on precautionary measures and general guidelines for safe use of your new equipment.

Use of the Instructions With This Radio

As stated previously, while the XP8103 has a dedicated, or single use, switch and potentiometer layout, it may be used for multiple model types. We have provided control identification diagrams with the manual that explain the different switch configurations.

2. Features

2.1 Transmitter NET-G128FS/HS Computer

• The micro computer system used in the XP8103 is the easiest to understand, easiest to operate multi-function 8-channel computer radio developed to date.

• The computer designed, ergonomically styled transmitter case features a newly designed, large LCD display for outstanding, easy-to-read graphics.

• The control sticks offer adjustable spring tension and length. The throttle stick offers a ratchet for smooth travel (airplane only).

• Ten model memory storage allows programming of all characteristics of ten separate helicopters, airplanes or gliders, or you can program more than one set-up for a single aircraft, allowing you to change the flight characteristics for that aircraft.

• Increased number of mixing functions that include multi-point programmable mixing.

• Programmable gyro sensitivity with automatic adjustment (helicopter only).

• All channel servo operation allows you to visually monitor servo travel.

• A five-year lithium back-up battery prevents loss of memory in the event that the battery discharges completely or is removed.

• Features automatic fail-safe and information update in PCM mode when fail-safe is used.

• A programmable trainer function allows the student to practice with individual channels separately.

• Direct Servo Control (DSC) permits operation of all the controls and servos while also making transferable all data between transmitters without generating a radio signal.

• Functions are also directly selectable from the newly employed Function List Display.

• Screen contrast is easily adjustable for improved clarity in all conditions.

2.2 Receiver

NER-649S (PCM Systems)

• This is a high performance PCM-FM single conversion receiver with 10 KHz super narrow band ABC&W circuitry.

• The latest "S" type Central Processing Unit (CPU) is used in the PCM receiver. The new NER649S offers the highest resolution available in any receiver.

• A narrow band ceramic filter for high signal selectivity also assists in rejecting cross modulation from other common radio frequencies (e.g., R/C transmitters, local paging systems). It has the highest degree of resistance to electro-mechanical "noise" to improve signal reception.

• This receiver features Direct Servo Control (DSC) permits control of surfaces without radio frequency output.

• The receiver has low current consumption.

• 3-point gold plated connectors allow increased conductivity.

NER-549 (FM Systems)

• The NER549 is a high performance FM single conversion receiver with 10 KHz super-narrow band ABC&W circuitry.

• A narrow band ceramic filter for high signal selectivity assists in rejecting cross modulations from other common radio frequencies (e.g., R/C transmitters, local paging systems).

• This receiver features Direct Servo Control (DSC) for control of surfaces without radio frequency output.

• The receiver has low current consumption.

• 3-point gold plated connectors allow increased conductivity.

2.3 Servo Features

507 Servo

• A zero deadband amplifier insures accurate neutral centering.

• The 507 has low current drain.

• An indirect drive feedback potentiometer gives additional protection from vibration.

• Redesigned features include SMT (Surface Mount Technology) circuitry.

• The 507 features a 3-pole ferrite cored motor.

517 Servo

• The 517 features a ball bearing output shaft for precise movement of your aircraft's control outputs.

• A zero deadband amplifier insures accurate neutral centering.

• The 517 has low current drain.

• An indirect drive feedback potentiometer gives additional protection from vibration.

• Includes SMT (Surface Mount Technology) circuitry.

• The 517 features a 3-pole ferrite cored motor.

531 Servo

• The 531 features a ball bearing output shaft for precise movement of your aircraft's control outputs.

• A zero deadband high performance amplifier insures accurate neutral centering and high torque (51 oz./ in.) with a speed of .23 sec/ 60°.

• The 531 has low current drain.

• An indirect drive feedback potentiometer gives additional protection from vibration.

• Includes SMT (Surface Mount Technology) Circuitry.

• The 531 features a 3-pole ferrite cored motor.

3. Component Specifications

3.1 System Specifications (Air/Heli)

	Aircraft		Helicopter	
System Name	XP-8103A		XP-8103H	
Transmitter Body	NET-G128FS		NET-G128HS	
Transmitter RF Module	NET-J72P/ NET-J50P/ NET-J53P		NET-J72P/ NET-J50P/ NET-J53P	
Receiver	NER-649S (PCM) NER-549 (FM)		NER-649S (PCM) NER-549 (FM)	
Charger	NEC-221		NEC-222	
Airborne Battery	4N-600 (flat)		4N-1000 (Flat)	
Servos	NES-507x4 (FM Only)	NES-517x4 (PCM Only)	NES-517x5 (FM only)	NES-531x5 (PCM Only)
Accessories	Deluxe Switch 12" AILE Ext. Charge Jack Servo Accys Hex Wrench Instruction Manual	Deluxe Switch 12" AILE Ext. Charge Jack Servo Accys Hex Wrench Instruction Manual	Deluxe Switch 12" AILE Ext Charge Jack Servo Accys Hex Wrench Instruction Manual	Deluxe Switch 12" AILE Ext. Charge Jack Servo Accys Charge Jack Instruction Manual

3.2 Transmitter Specifications (Air/Heli)

	Aircraft	Helicopter
Model Number	NET-G128FS	NET-G128HS
Encoder	8-Channel Computer System	8-Channel Computer System
RF Module	50/ 53/ 72MHz	50/ 53/ 72MHz
Modulation	PCM (S or Z) or PPM	PCM (S or Z) or PPM
Output Power	Approximately 750mw	Approximately 750mw
Current Drain	200mA (70mA with DSC)	200mA (70mA with DSC)
Power Source	1.2Vx8 NiCad (9.6v) 550 mAh	1.2Vx8 NiCad (9.6v) 550 mAh
Output Pulse	1000-2000 (1500 Neutral)	1000-2000 (1500 Neutral)

3.3 Servo Specifications

	507	517	531
Torque (oz./in.)	40.3	40.3	51.0
Speed (sec./60°)	.25	.25	.23
Weight (oz.)	1.47	1.58	1.50
Size (in.) (W x L x H)	1.52 x 0.73 x 1.32	1.52 x 0.73 x 1.32	1.52 x 0.73 x 1.32
BB	N/A	Single	Single
Motor	3-Pole Ferrite	3-Pole Ferrite	3-Pole Ferrite

3.4 Receiver Specifications

	PCM	FM
Model Number	NER649S	NER549
Type	9-Channel / FM-ABC&W / S-PCM	9-Channel / FM-ABC&W / Micro
Frequency	50/53/72MHz	50/53/72MHz
Sensitivity (Microseconds)	5μS Minimum	5μS Minimum
Selectivity	8KHz / 50dB	8KHz / 50dB
Weight (oz.)	1.5	1.5
Size (in.) (W x L x H)	1.42 x 2.00 x 0.63	1.42 x 2.00 x 0.82
Receiver Antenna	39" for all Aircraft Frequencies	39" for all Aircraft Frequencies

3.5 Charger Specifications

	Aircraft	Helicopter
Model Number	NEC-221	NEC-222
Input Voltage	AC 100-120V	AC 100-120V
Output Current	50mA Tx / 50mA Rx	50mA Tx / 120mA Rx
Charging Time	15 Hours	15 Hours

3.6 Airborne Battery Pack

	Aircraft	Helicopter
Model Number	4N-600 (Flat)	4N-1000 (Flat)
Voltage	4.8V	4.8V
Size (in.) (W x L x H)	2.24 x 0.59 x 2.05	2.60 x 0.63 x 1.70
Weight (oz.)	3.3	4.9

II. Common Features

4. Battery Charging

4.1 Transmitter/Receiver

Note: It is imperative that you fully charge both the transmitter and the receiver battery packs prior to each flight.
To do so, leave the charger and batteries hooked up overnight (16 hours). The first charge should be approximately 20–24 hours in order to fully charge both battery packs to peak capacity.

The charger supplied with this system is designed to recharge your batteries at a rate of 50 mA for the transmitter and 50 mA (120 mA for helicopter) for the receiver battery pack.

Transmitter Polarity

The center pin on all JR Remote Control Systems is negative. Therefore, the center pin on all JR chargers is negative, not positive. **This is different from many other manufacturers' chargers and radio systems.** Beware of improper connections based on "color coded" wire leads as they do not apply in this instance. You must make sure that the center pin of your JR transmitter is always connected to the negative voltage for correct polarity hookup.

Transmitter

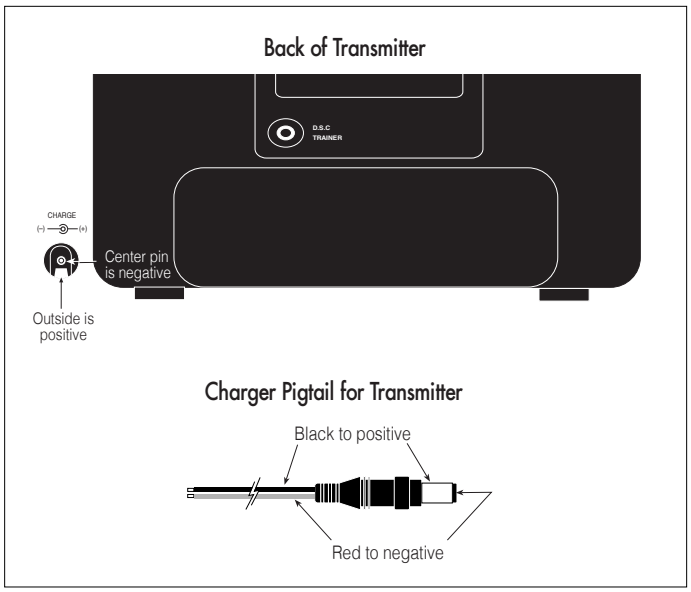

Receiver

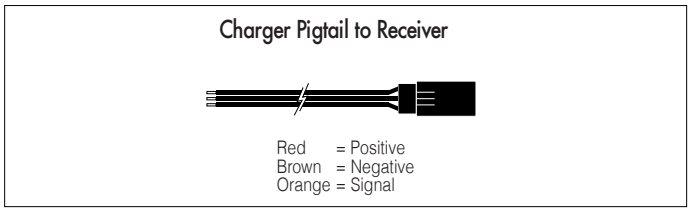

4.2 Charger

The pilot lamps should always be ON during the charging operation. If they're not, check to make sure that both the transmitter and receiver are switched OFF.

Do not use this charger for equipment other than JR. The charging plug polarity may not be the same and equipment damage can result.

Do not use other manufacturers' after-market accessories that plug into the transmitter's charging jack. If you do, any damage that results will not be covered by the warranty. If you are unsure of compatibilities with your radio, seek expert advice before doing anything to avoid possible damage.

During the charging operation, the charger's temperature is slightly elevated. This is normal. Also, note that the voltage shown on the charger is higher than the battery in use. This voltage cannot be measured with a voltmeter. Only current can be measured with any accuracy using this type of charger.

Be sure to use the proper charge rate (120 mA) when using battery packs of 1000 mAh or larger for your receivers.

5. General Information

5.1 Control Stick Length Adjustment

The XP8103 allows you to adjust the control sticks' length.

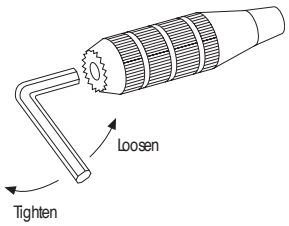

To adjust the stick length, use the 2 mm Allen wrench (supplied with your XP8103 transmitter) to unlock the set screw.

Note: Turn the wrench counterclockwise to loosen the screw. Then, turn the stick clockwise to shorten or counterclockwise to lengthen.

After the control stick length has been adjusted to suit your flying style, tighten the 2 mm set screw.

If you desire longer sticks, JR offers a thicker stick (JRPA047) that is approximately one inch longer than the standard stick. This stick, crafted from bar stock aluminum, is available at your local JR dealer.

5.2 Control Stick Tension Adjustment

Remove the transmitter RF module, Nicad battery, and six (6) transmitter back cover screws. Remove the transmitter back, being careful not to bend or damage the RF module pins. Adjust each screw for the desired tension (counterclockwise to loosen stick feel, clockwise to tighten stick feel). When adjusting the throttle ratchet tension, make sure the adjusting screw does not touch the PC board after the adjustment is complete.

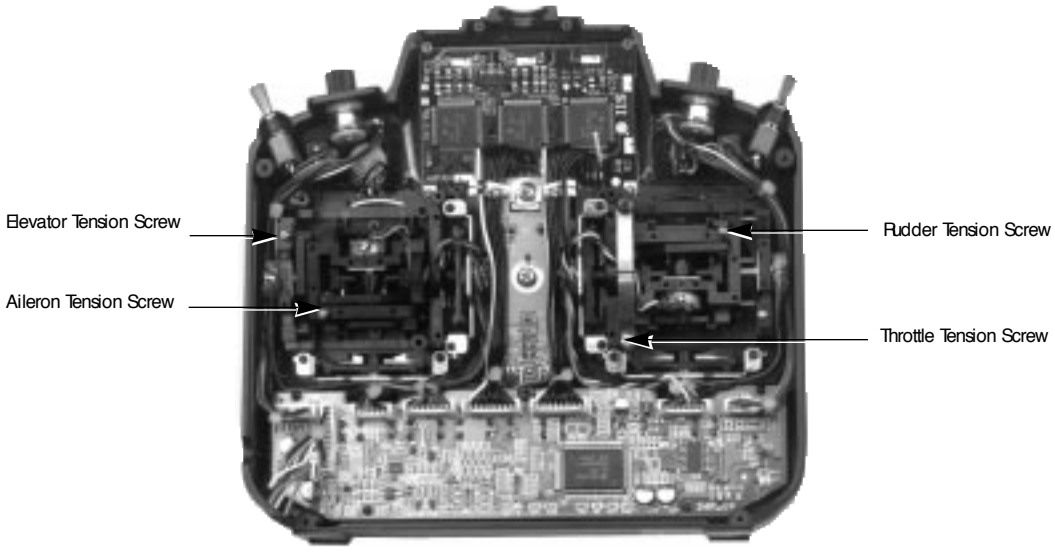

5.3 Transmitter Rear

Transmitter Module

When the transmitter module is removed, you will find that the fuse is located at the bottom of the module cavity for easy replacement.

DSC/ Trainer Jack

Charging Jack for Nicad Battery Only (8N600S)

Battery Cover (Removed)

Caution: The battery connector is keyed so that it can only be plugged in in one direction. Do not force.

Cord Hook

When a trainer cord is used, place the cord between this hook and the transmitter body to avoid possible cord detachment during use.

5.4 DSC Cord

For proper DSC hook up and operation:

1. Leave the transmitter power switch in the OFF position. The transmitter will not transmit any radio frequency (RF) in this position.

2. Plug the DSC cord (optional) into the DSC port in the rear of the transmitter.

3. The encoder section of the transmitter will now be operational and the LCD display will be lit.

4. Plug the other end of the DSC cord into the receiver charge receptacle. Turn the switch harness to the ON position.

Note: The DSC function will only operate with the JRPA001 Deluxe Switch Harness, or the JRPA004 Charge Switch.

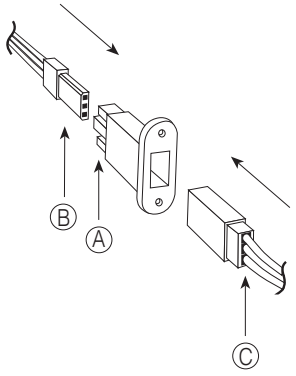

A. Charge cord/ DSC receptacle
B. Switch harness lead
C. Charge cord/ DSC lead

When you install the charging jack, be sure to hook the charging jack receptacle securely into the switch harness charge cord.

Why you should use the DSC function:

1. The DSC enables you to check the control surfaces of your airplanes without drawing the fully operational 200 mAh from your transmitter battery pack. Instead, you will only draw 70 mAh when using the DSC function.

2. The DSC function allows you to make final adjustments to your airplane without transmitting any radio signals. Therefore, if another pilot is flying on your frequency, you can still adjust your airplane and not interfere with the other pilot's aircraft.

Note: Under no circumstances should you attempt to fly your airplane with the DSC cord plugged in! This function is for bench checking your airplane only.

5.5 Neck Strap Adjustment

An eyelet is provided on the face of the XP8103 transmitter which allows you to connect a neck strap (JRPA023). This hook has been positioned so that your transmitter has the best possible balance when you use the neck strap.

Note: Double check to ensure that the neck strap is securely fastened to the transmitter.

5.6 Base Loaded Antenna

An optional base loaded antenna is available for use with the XP8103 transmitter. It is considerably shorter than the standard antenna. However, the base loaded antenna cannot be collapsed for storage in the side of the transmitter. You must also use an adaptor (JRPA156) to attach the antenna to your XP8103. The base loaded antenna (JRPA155) is made of a flexible coil and is covered with a soft plastic material. Your range will not be affected when using the base loaded antenna.

5.7 Frequency Notes/Aircraft Only Frequencies

The XP8103 employs a plug-in module system for transmitter frequency changes. If you want to change a frequency, you can simply change the radio frequency (RF) module, commonly referred to as either an RF module or transmitter module. The JR modules are universal for all modular frequency controlled systems. In other words, if you currently own a modular JR system, you can use the RF module from your current system with the XP8103.

The XP8103 can transmit in either Pulse Code Modulation (PCM) or in Pulse Position Modulation (PPM, commonly referred to as FM). Be certain to observe the following guidelines:

1. Do not operate your transmitter when another transmitter is using the same frequency, regardless of whether the second transmitter is PCM, PPM (FM) or AM. You can never operate two transmitters on the same frequency simultaneously without causing interference to both receivers and crashing both aircraft.

2. For operation of your XP8103 with additional receivers, you should refer to the receiver compatibility chart. The chart is located in the Modulation Select Section of this manual. (pg. 31)

Aircraft Only Frequencies

JR RF modules and receivers are available on 50, 53, and 72 MHz frequencies in the United States for use with model aircraft. Employing 72 MHz frequencies does not require a special operators license from the Federal Communications Commission (FCC). However, the 50 and 53 MHz frequencies require that you carry a Technician II license.

• A chart for all available frequencies is located on page 142 of this manual.

5.8 Lithium Battery Indicator/Backup Error Display

Lithium Battery Indicator

If the voltage level of the lithium battery drops below an acceptable level (2.2v), an "L" will appear and flash to the left of the model number. This indicates that the lithium battery will no longer maintain program memory if the main battery is disconnected. When the flashing "L" appears on the screen, the system should be sent to the JR Horizon Service Center for a lithium battery replacement.

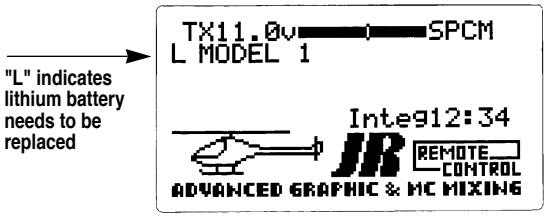

Alarm and Backup Error Display

All pre-programmed data is protected by a five-year lithium battery that guards against main transmitter battery failure. Should the lithium battery fail, the display will indicate 1 back up error regardless of the position of the ON/OFF switch. If this occurs, it will be necessary to replace the battery and reprogram all data. All transmitter programs will return to the factory default setting, and the data you have input will be lost.

When it becomes necessary to replace the lithium back-up battery, contact the JR Horizon Service Center. Due to the possibility of extensive damage caused by improper removal or replacement, only the JR Horizon Service Center is authorized to make the change.

JR Horizon Service Center
4105 Fieldstone Road
Champaign, IL 61821

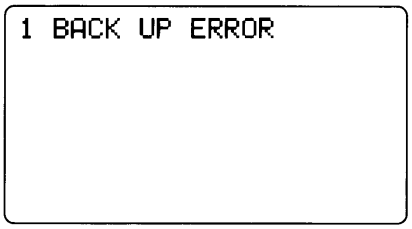

5.9 Screen Contrast Adjustment

The screen contrast adjustment feature of the XP8103 allows the user to select the proper tint of the screen for improved clarity and visibility in all weather conditions and temperatures.

To increase the contrast (darken the screen), simply turn the power switch ON and press the SEL and DATA + keys simultaneously. To decrease the contrast (lighten the screen), press the SEL and DATA - keys simultaneously.

5.10 Installation Requirements

It is extremely important that your radio system be correctly installed in your model. Here are a few suggestions on the installation of your JR equipment.

1. Wrap the receiver in protective foam rubber that is no less than 3/8 inch thick. Secure the foam to the receiver with #64 rubber bands. This protects the receiver in the event of a crash or a very hard landing.

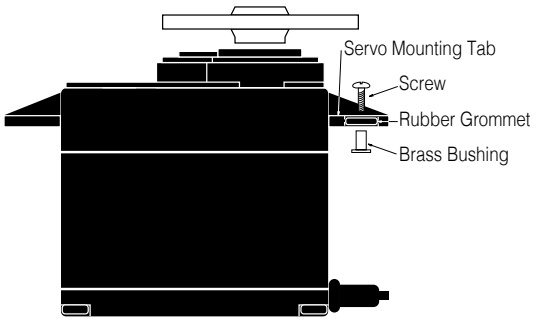

2. The servos should be mounted using rubber grommets and brass bushings to isolate them from vibration. Do not over-tighten the mounting screws — this will negate the vibration absorption effect of the rubber grommets. The diagram at left will assist you in properly mounting your servo.

The brass bushings are pushed from the bottom up in the rubber grommets. When the servo screw is tightened securely, it provides the proper security, as well as the proper vibration isolation, for your servo.

3. The servos must be able to move freely over their entire range of travel. Make sure that the control linkages do not bind or impede the movement of any of the servos.

4. Mount all switches away from the engine exhaust and away from any high vibration areas. Make sure each switch operates freely and is able to operate over its full travel.

5. Mount the receiver antenna firmly to the airplane to ensure that it will not become entangled in the propeller or control surfaces.

III. Airplane Section

1. Transmitter Controls

1.1 Control Identification and Location

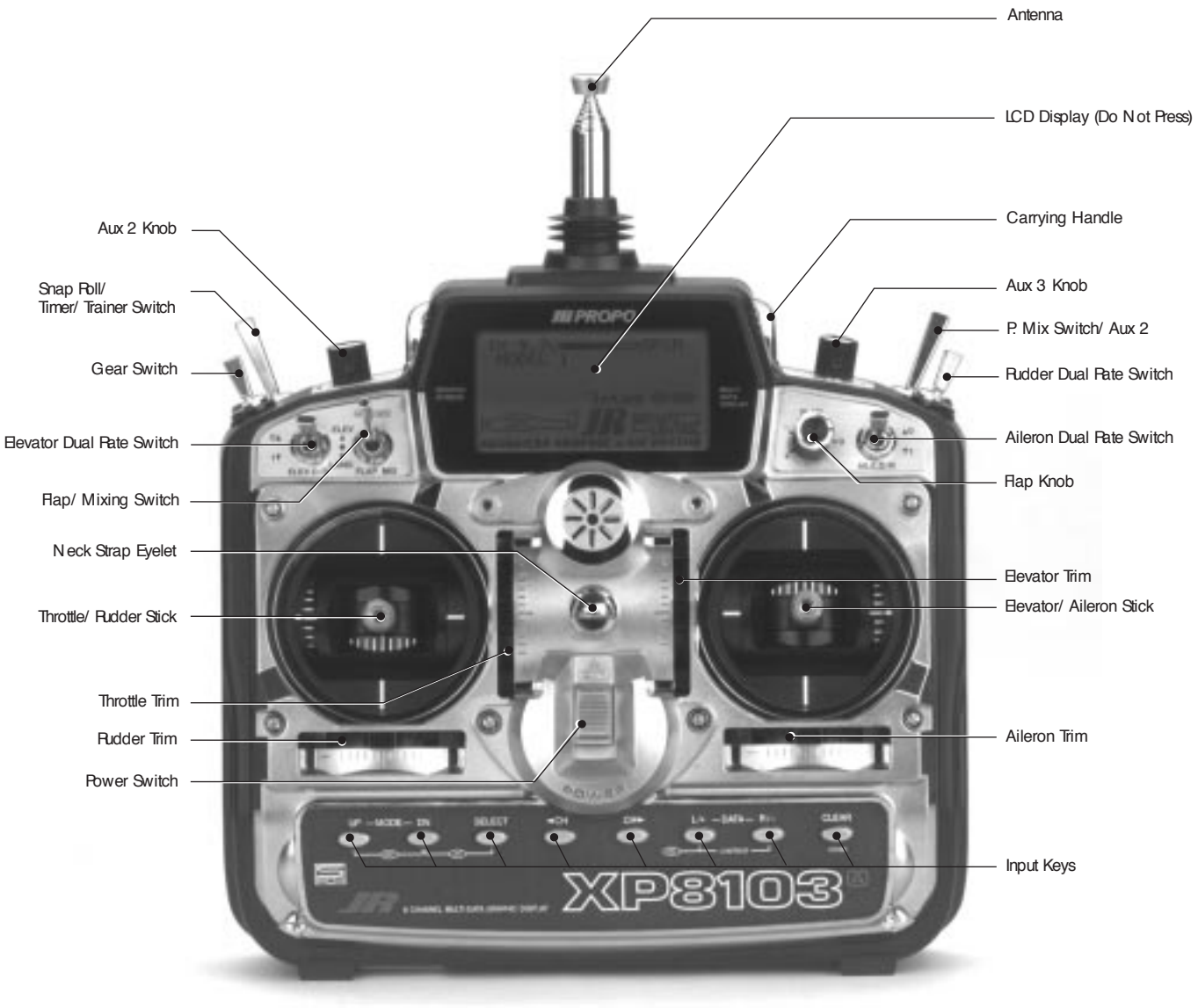

Channel Assignment/Throttle ALT

Channel #	TX Function	Airplane Function
1	Thro	Throttle Channel
2	Aile	Aileron Channel
3	Elev	Elevator Channel
4	Rudd	Rudder Channel
5	Gear	Gear Channel
6	Flap	Auxillary 1 Channel (Flap)
7	SPOI	Auxillary 2 Channel (Spoiler)
8	Aux 3	Auxillary 3 Channel

Throttle ALT

The Throttle ALT function makes the throttle stick trim active only when the throttle stick is at less than half throttle. This gives easy, accurate idle adjustments without affecting the high throttle position.

Airplane Version Transmitter – Heli Mode

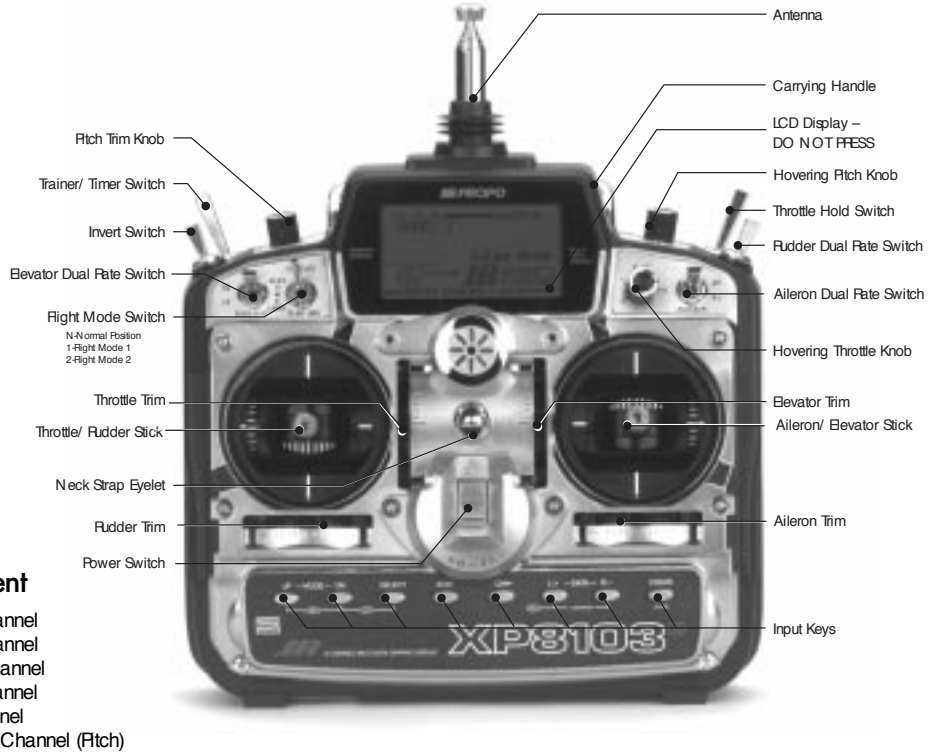

Channel Assignment

1. THRO Throttle Channel
2. AILE Aileron Channel
3. ELEV Elevator Channel
4. RUDD Rudder Channel
5. GEAR Gear Channel
6. AUX1 Auxiliary 1 Channel (Pitch)
7. AUX2 Auxiliary 2 Channel (Gyro Sensitivity)
8. AUX3 Auxiliary 3 Channel

Airplane Version Transmitter – Glider Mode

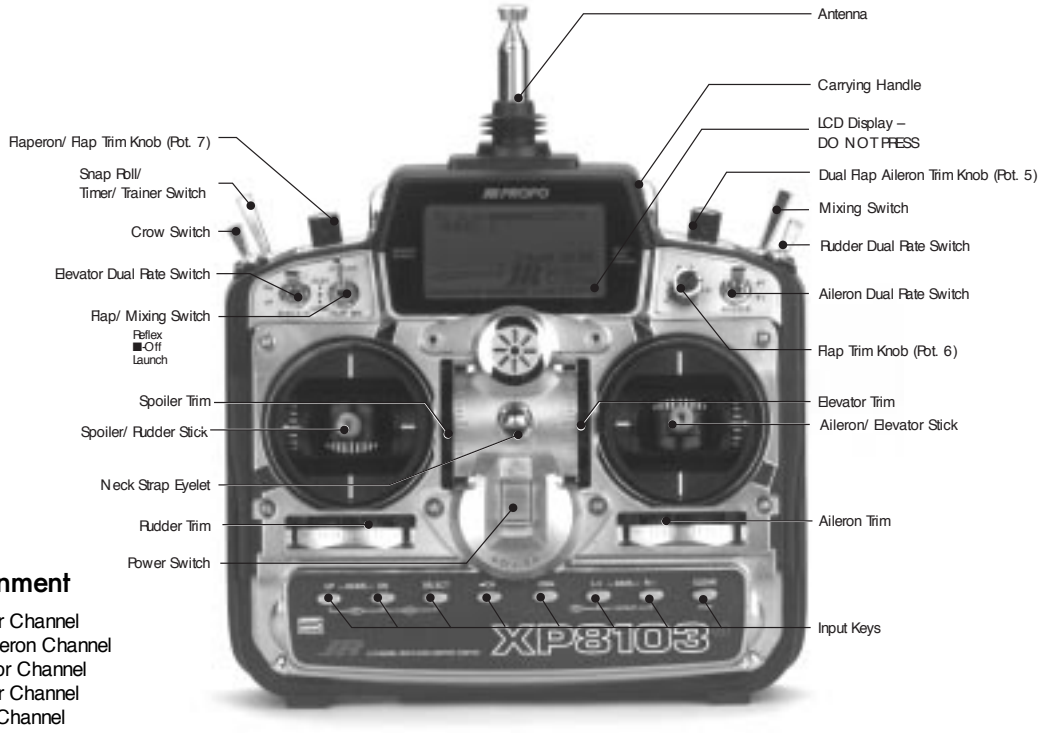

Channel Assignment

1. SPOI Spoiler Channel
2. AIL1 Left Aileron Channel
3. ELEV Elevator Channel
4. RUDD Rudder Channel
5. AIL2 Gear Channel (Right Aileron Channel–AILE 2)
6. FLAP Auxiliary 1 Channel (Left Flap Channel for Dual Flaps)
7. AUX2 Auxiliary 2 Channel (Right Flap Channel for Dual Flaps)
8. AUX3 Auxiliary 3 Channel

1.2 Connections

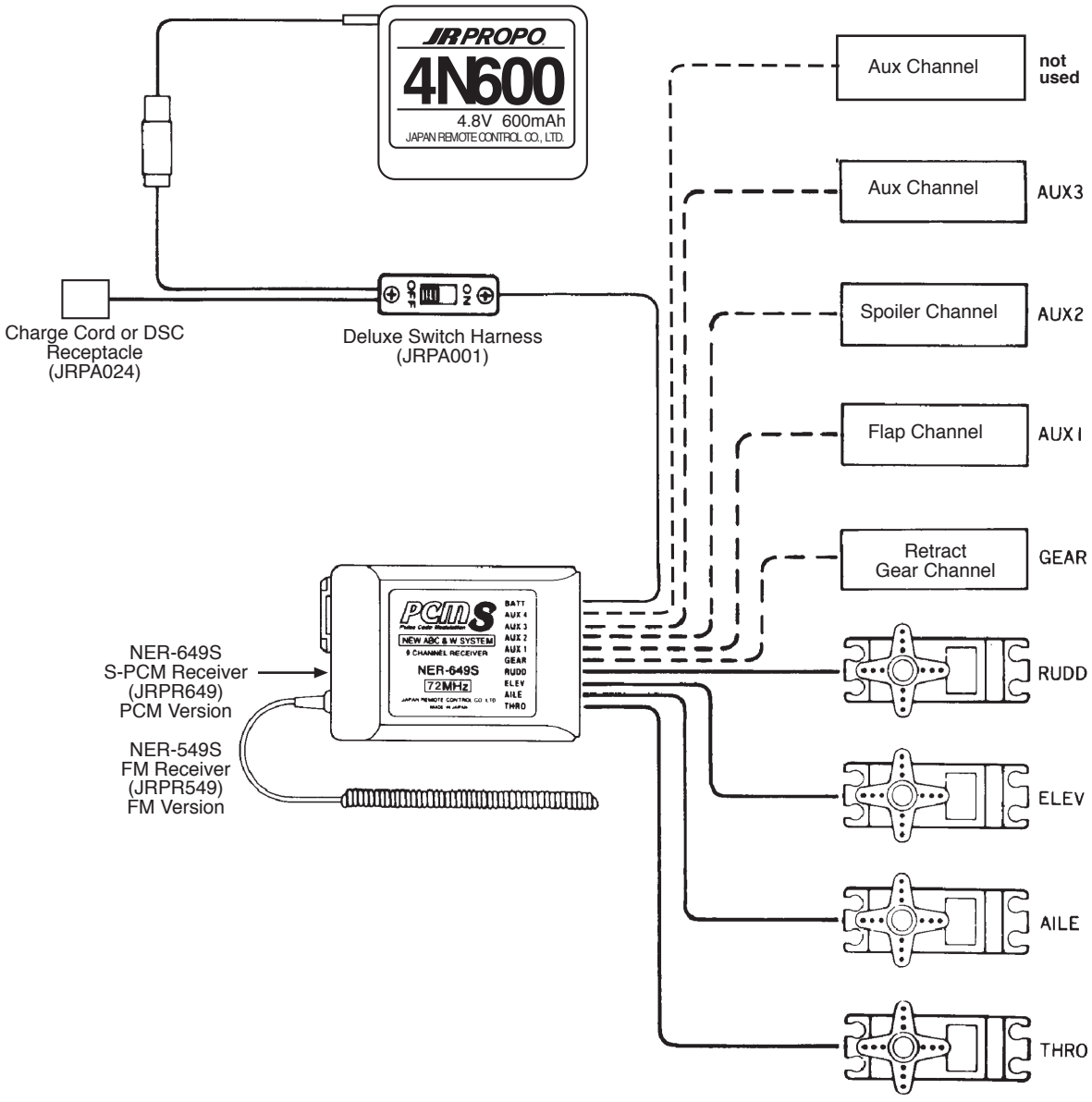

2.1 Input Key Functions

• You will hear a clicking (beeping) sound to confirm input has been achieved.

• Except for the CLEAR key, the AUTO advance system (two speed scrolling) is active when you continue pressing down on a key.

• The SEL keys or CH keys are used to scroll through, or manipulate functions within a specific program or display.

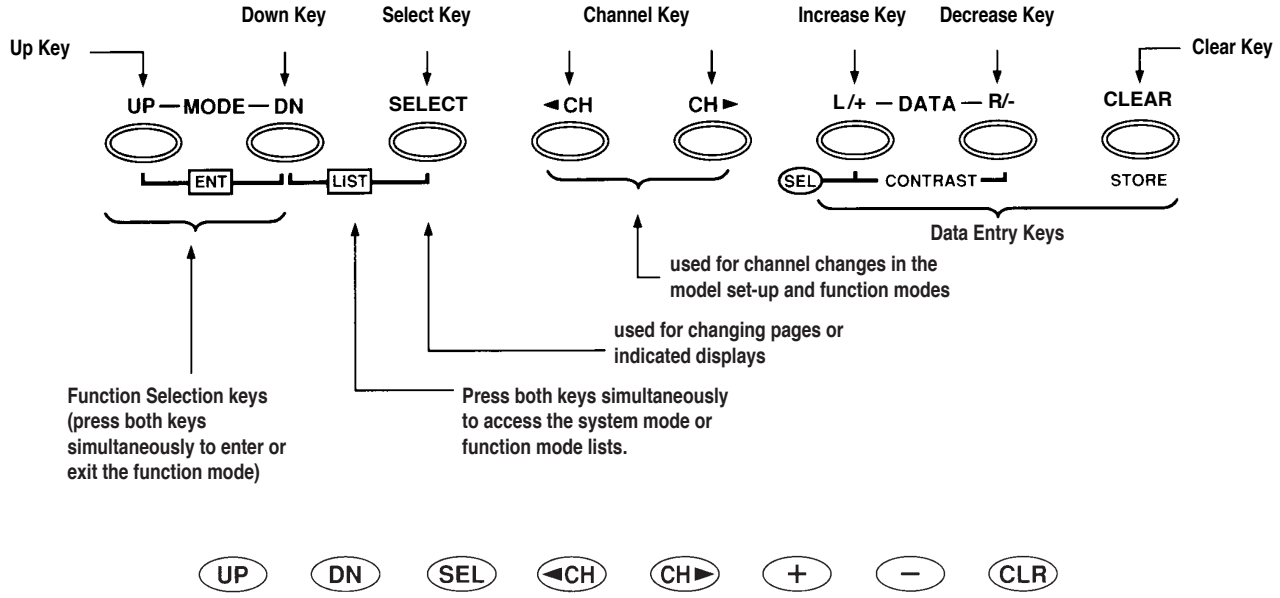

2.2 Normal Display

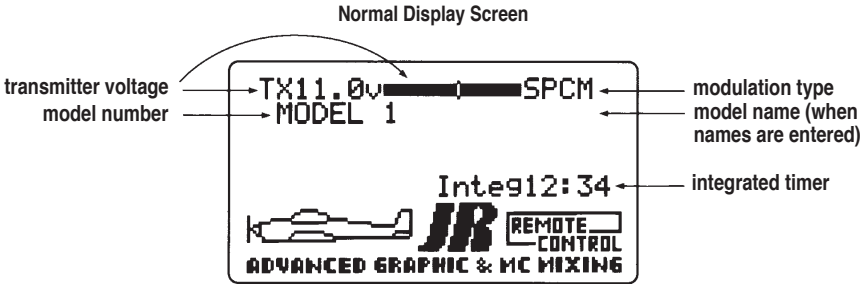

From the Normal Display, the following inputs can be made:

When setting various functions with the buttons shown below, start either in the Function Mode or the System Set-Up Mode.

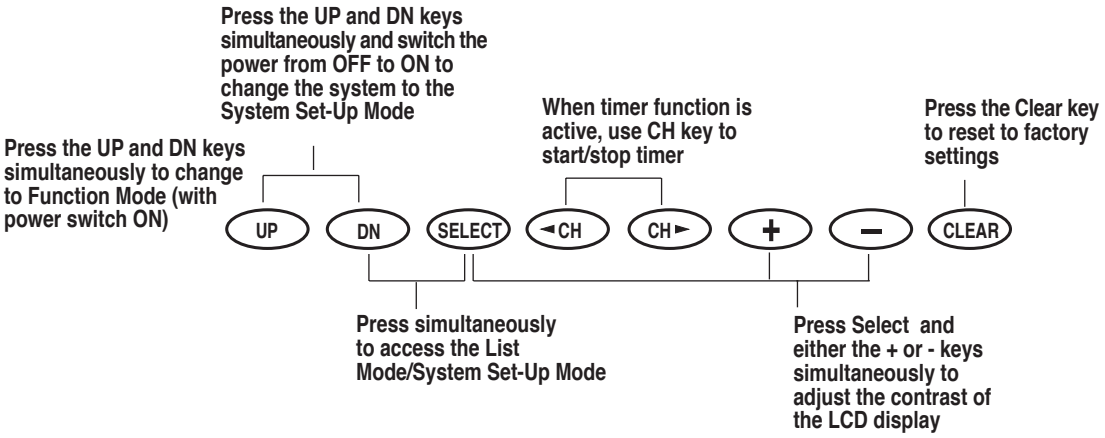

3. System Set-Up Mode Functions

3.1 System Set-Up Mode

To set the System Set-Up Mode, press the UP and DN keys simultaneously and turn the power switch from OFF to ON. Functions are selectable by pressing either the DN or UP keys. Individual settings are explained later at each function. In this mode, servos are not activated, but operating signals are transmitting (only when the Tx module is in place). However, use extra caution not to interfere with other frequencies. By pressing the DN and UP keys simultaneously, you can return to the normal display, which allows the servos to again operate.

SYSTEM SET-UP MODE

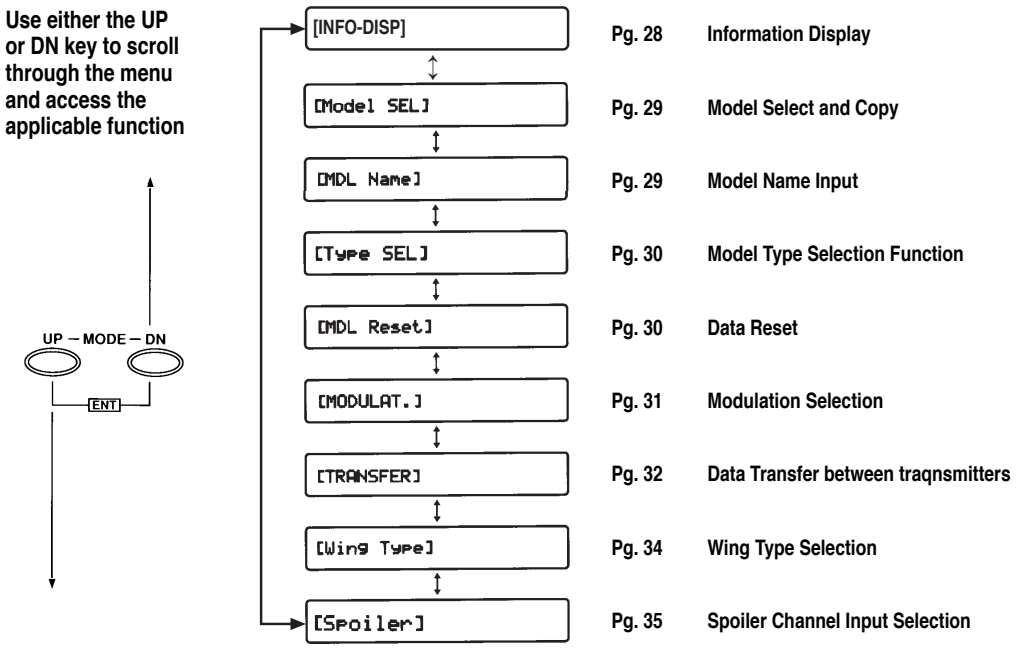

3.2 Function Mode

From Normal Display, press the UP and DN keys simultaneously to enter the Function Mode. In this mode, by using the UP or DN keys, the desired functions can be selected. When channel selection or an additional function change is desired, use the CH keys or SEL key. For example, Dual Rate Function is selected and the elevator channel is displayed by pressing the UP key once; the function is changed to the next mode, Reverse Switch, but the channel is still displayed as elevator.

Function Mode Flowchart

Information pertaining to each function is explained on the page number listed next to the function name. Functions will appear on the screen in the same order they are shown on the flow chart below:

Therefore, by scrolling through the program, you can adjust each function related to the elevator channel quickly and easily.

To Access The Function Mode

1. Switch the power switch to the ON (upper) position.
2. Press the UP and DN keys simultaneously.
3. Use either the UP or DN keys to scroll through the menu and access the appropriate function.

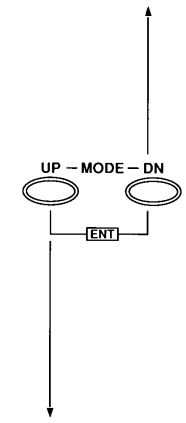

[D/R & EXP]	Pg. 36	Dual Rate, Exponential
[REV.SW]	Pg. 38	Reverse Switch
[Sub Trim]	Pg. 38	Sub-Trim
[TRVL ADJ.]	Pg. 39	Travel Adjust (end point adjustment)
[ELEV→FLAP Mix]	Pg. 39	Elevator to Flap Mixing
[AILE→RUDD Mix]	Pg. 40	Aileron to Rudder Mixing
[Landing]	Pg. 41	Landing System
[Snap Roll]	Pg. 42	Snap Roll
[DIFFEREN.]	Pg. 44	Differential Aileron Mixing (only if flaperon or elevons mixing is active)
[Trim OFST]	Pg. 45	Trim Offset Memory
[FLAP POT.]	Pg. 46	Flap Knob Operating Value Adjustment
[PROG.Mix1]	Pg. 47	Programmable Mixing 1
[PROG.Mix2]	Pg. 47	Programmable Mixing 2
[PROG.Mix3]	Pg. 47	Programmable Mixing 3
[PROG.Mix4]	Pg. 47	Programmable Mixing 4
[PROG.Mix5]	Pg. 47	Programmable Mixing 5
[PROG.Mix6]	Pg. 47	Programmable Mixing 6
[Fail Safe]	Pg. 50	Fail-Safe/Hold (PCM Only)
[Trainer]	Pg. 52	Trainer
[TIMER]	Pg. 54	Timer
[SERVO]	Pg. 55	Servo Output Values

3.3 List Mode (Function Mode)

To enter the List Mode, press the DN and SEL keys simultaneously. From this display, pressing the UP and DN keys simultaneously will move the system from the list mode to the function shown at the cursor. Note that the cursor is moved by the UP and DN keys.

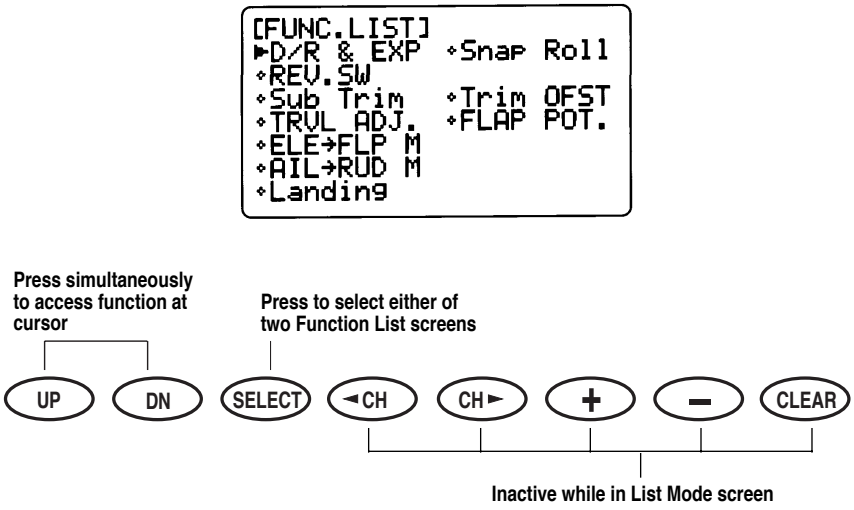

3.4 Model Select (System Set-Up Mode)

The XP8103 transmitter employs a memory function which memorizes data for up to 10 individual aircraft. All settings along with type selection, function, and different aircraft are used by one transmitter. For example, Model 1 is helicopter and Model 2 is airplane. To avoid confusing models, inputing model names for each aircraft is recommended (see page 29). Press the UP and DN keys simultaneously and turn the power switch ON to access the System Set-Up Mode.

The display below shows the model selection function.

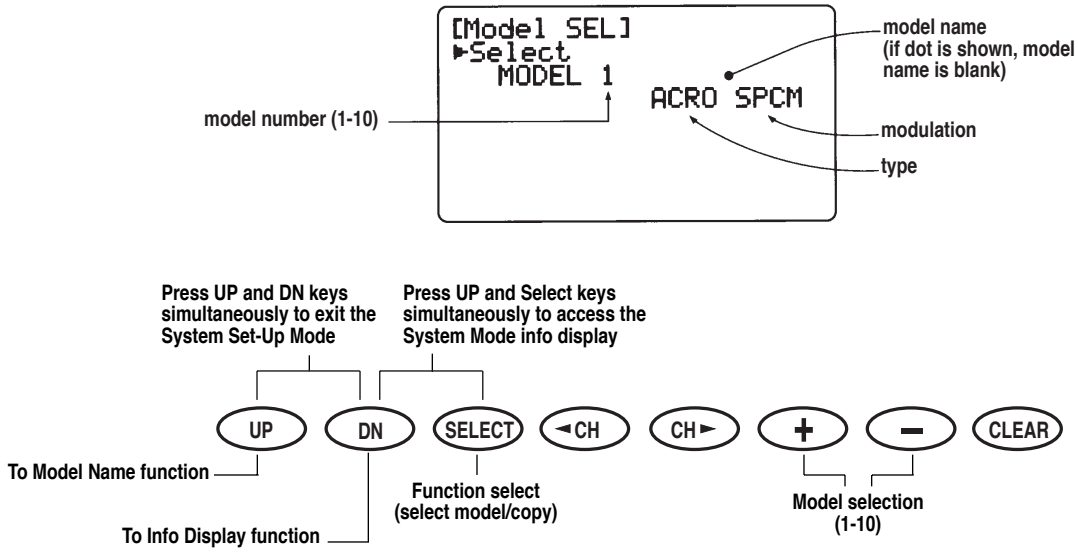

3.5 Copy Select Function (System Set-Up Mode)

The Copy Select Function enables you to copy all of the settings of your current model to another memory (model number) within the same transmitter. This is very useful when setting up one aircraft several different ways.

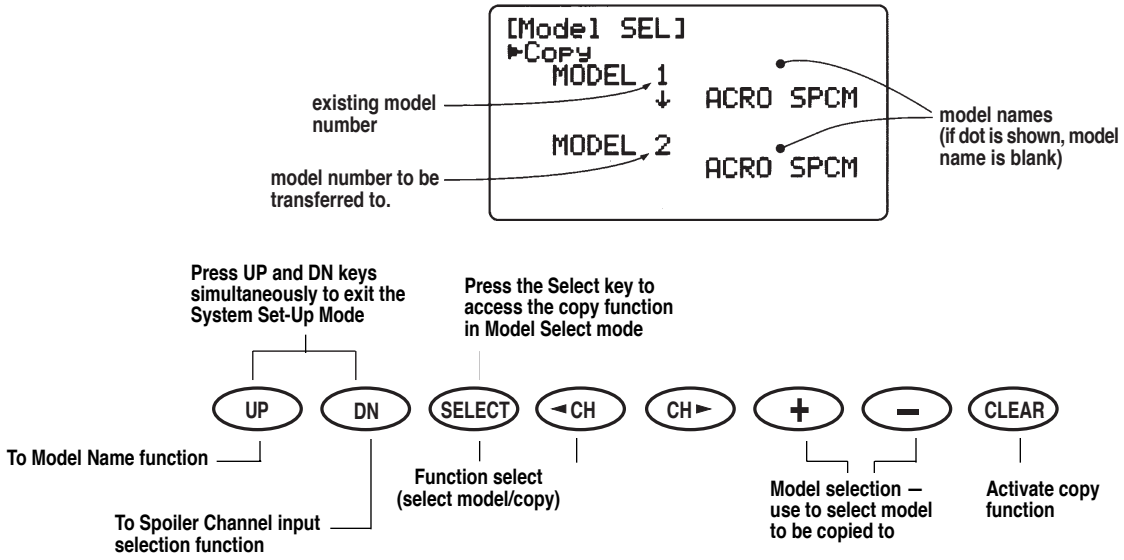

3.6 Model Names (System Set-Up Mode)

This function is used to input model names individually. Each model's name is displayed in the normal screen automatically. when that model is selected. To avoid confusing models, inputing model names is recommended. You can input a maximum of 8 characters for each model name.

In the System Set-Up Mode, select the Model Name Function using the UP or DN key. Once selected, simultaneously press the UP and DN keys to access.

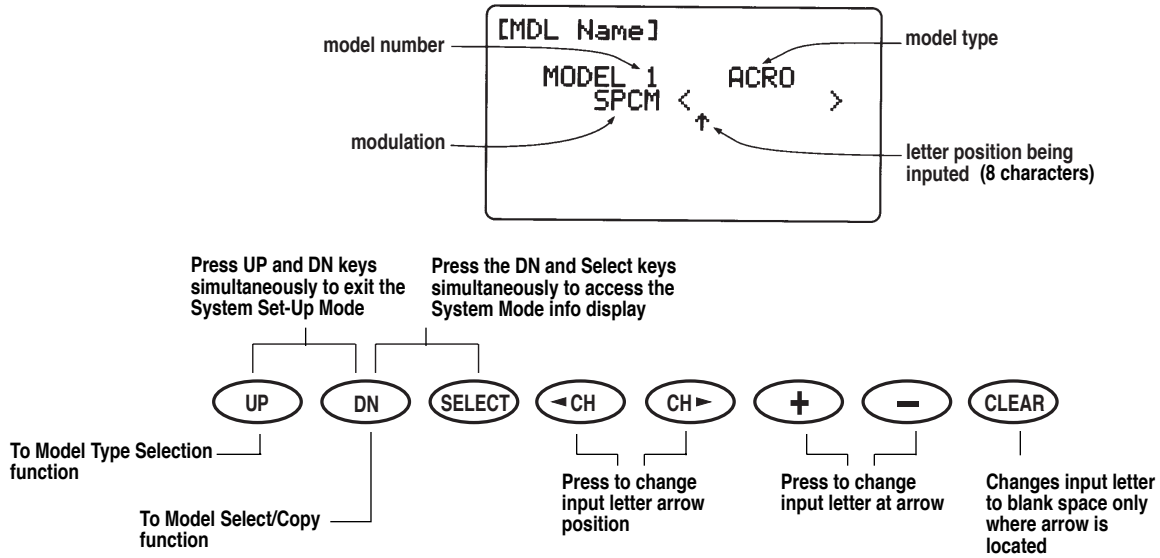

3.7 Model Type Selection (System Set-Up Mode)

The XP8103 is capable of performing as a helicopter, airplane or glider radio with full functions for each.

It can also memorize data for 10 models individually.

Note: If the power switch is turned OFF immediately after selecting the new model type, the change will not be saved. To change and save the model type press the UP or DN keys, or press UP and DN keys or DN and SEL keys simultaneously. At this time, existing model data is replaced by the model type aircraft data selected. Be sure to confirm the model name to prevent accidental loss of your important data. To cancel this function, return to former model type or turn the power switch OFF.

Note: When you select helicopter or glider model type on this transmitter, allocation of lever switches, etc., will also change. Please refer to the helicopter or glider section of this instruction manual for their functions.

In System Set-Up Mode, select the Type Select Function and simultaneously press the UP and DN keys to access

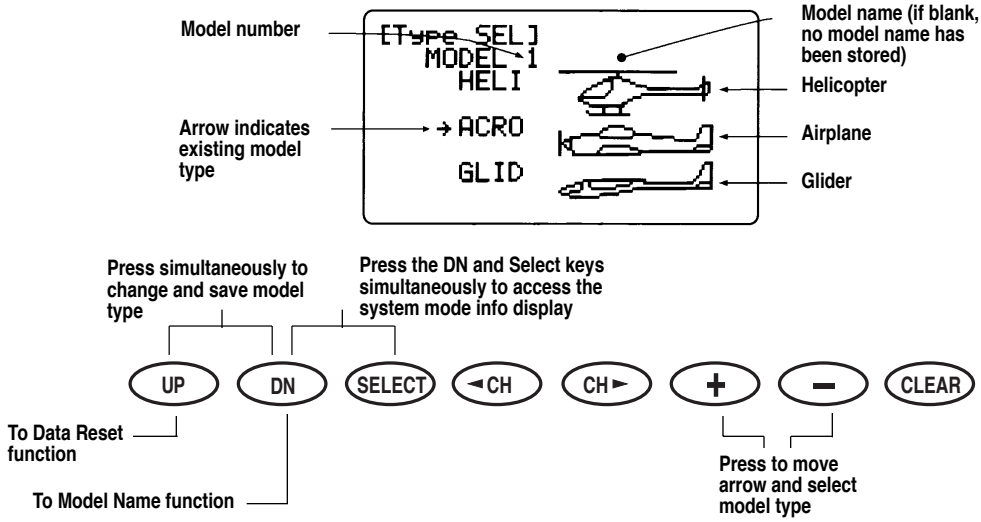

3.8 Data Reset (System Set-Up Mode)

The Data Reset Function allows you to reset all the functions and settings for the current model to the factory pre-set conditions. Resetting does not affect the data already programmed for other models. Be sure to confirm that you need to reset the data of the currently indicated model in order to prevent accidental loss of valuable data.

Note: If a model name has been input and is reset, the model name will not be removed, only the data. Please refer to the Model Name Function for information on how to change the model's name.

To access Data Reset, select Model Reset in System Set-Up and press the UP and DN keys simultanelously.

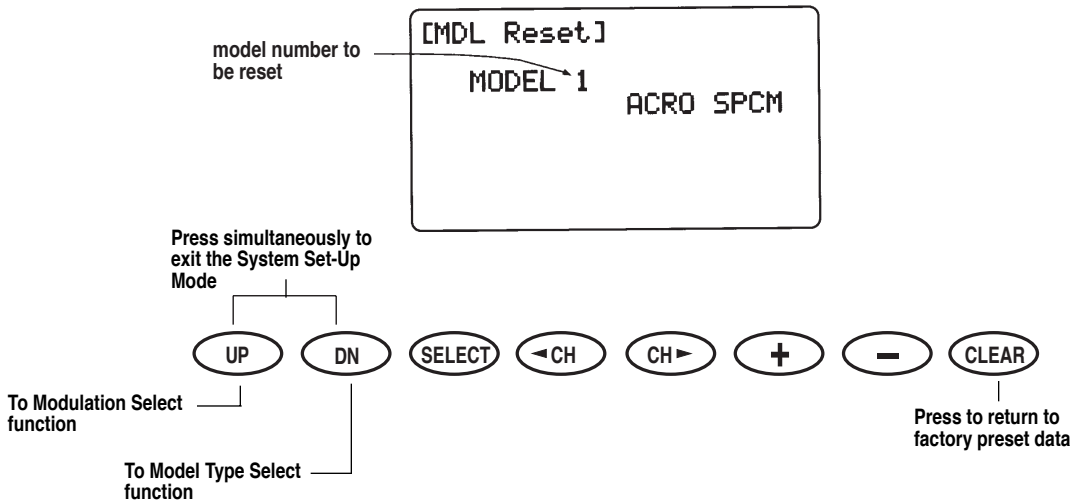

3.9 Modulation Select (System Set-Up Mode)

The Modulation Selection Function enables your XP8103 to transmit to a variety of JR receivers that are already, or may soon be, in existence. You can select from either S-PCM or Z-PCM mode, depending on the Central Processing Unit within your receiver, or from PPM (Pulse Position Modulation—FM). Refer to the receiver compatibility chart for the correct modulation.

Caution: After making modulation changes, you must press either the UP and DN, or the DN and SEL keys simultaneously to accept the new modulation type. If the Tx power switch is turned OFF before this procedure, the modulation change will not be saved.

Receiver Compatibility Chart

Tx Modulation	Compatible Receivers	# of Channels & Brief Description
PPM (FM)	NER-226	6 (micro)
PPM (FM)	NER-228	8
PPM (FM)	NER-327x	7
PPM (FM)	NER-527x	7 (micro)
PPM (FM)	NER-529x	9 (micro)
PPM (FM)	NER-549	9
PPM (FM)	NER-600	6 (micro)

Tx Modulation	Compatible Receivers	# of Channels & Brief Description
Z-PCM	NER-236	6 (micro)
Z-PCM	NER-627XZ or 627 "G" series	7
Z-PCM	NER-J829P	9
Z-PCM	NER-910XZ	10
S-PCM	NER-D940S	10
S-PCM	NER-649S	9

In system Set-Up Mode, select Modulation Select using the UP and DN keys and press the UP and DN keys simultaneously to access.

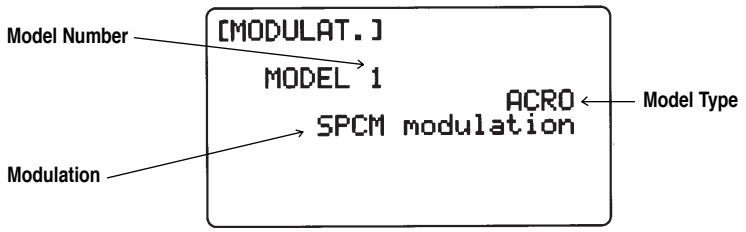

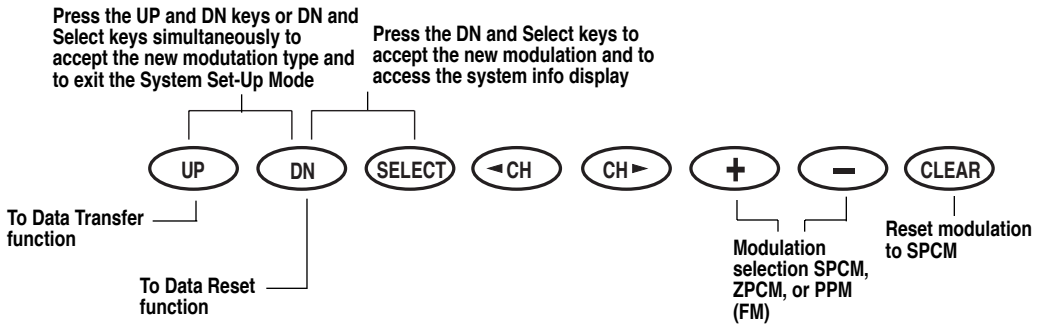

3.10 Data Transfer (System Set-Up Mode)

This function is used to transfer all existing memorized data for a model from one XP8103 transmitter to another XP8103 transmitter.

Use the + and - keys to select models to be transferred and activate by pressing the CLR key.

To avoid the loss of important data, re-confirm model names when transferring.

Caution: Please use special caution when copy function is activated as existing data is replaced with new data.

Caution: When the battery alarm is activated (battery low), the copy function is not operational.

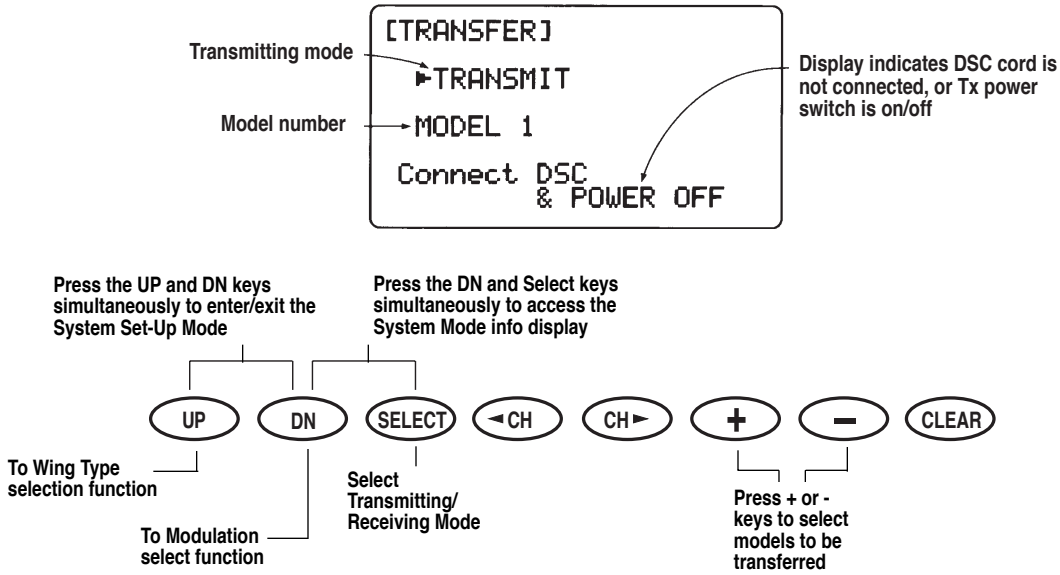

Transfer Procedure

1. Select the model number to be transferred (transmitting mode side) through the model select function. (See page 28 for information on Model Select Function.)

2. Both transmitters: With the power switches OFF, press the UP and DN keys simultaneously while inserting the trainer cord into the DSC jacks of both transmitters.

3. Both transmitters: Select the Transfer Fuction by pressing the UP or DN key. Then simultaneously press the UP and DN keys to enter the Transfer Function.

4. Receiving mode transmitter (Tx to be programmed): Press the Select key until the screen reads "Receive." Select the receiving model number by pressing the + or - keys. Next, press the CLR key to activate the receiving stand-by mode.

5. Transmitting mode transmitter (Tx with program to be transferred): Press the CLR key to start transmitting data. Both transmitters will indicate [End ok!] display when the transmitting is complete.

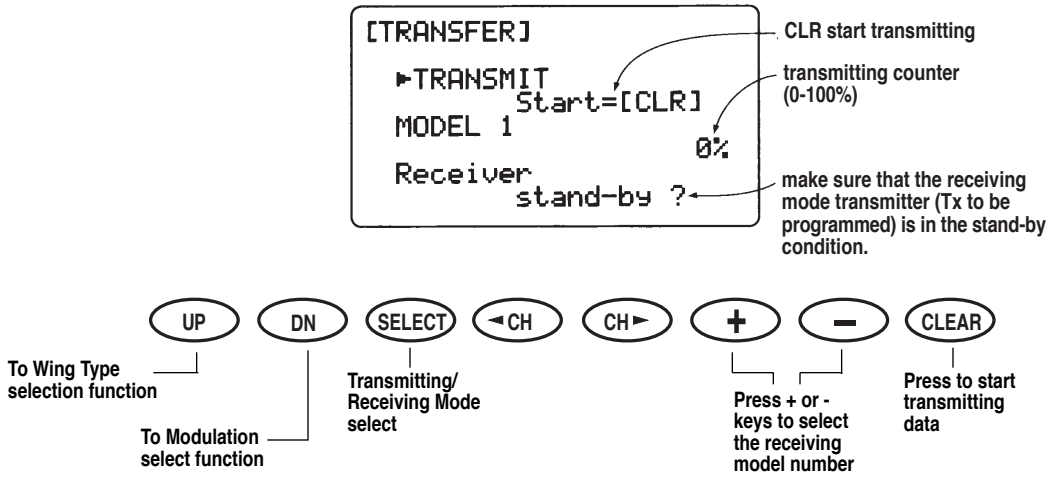

When there is a data receiving failure during transmitting, the counter will stop. At this time, press the CLR key to stop the receiving condition. Check to be sure the receiving counter is operating normally and ended with 100%. If there is any failure of transferring, the display will appear as follows:

ERROR Tx mismatch

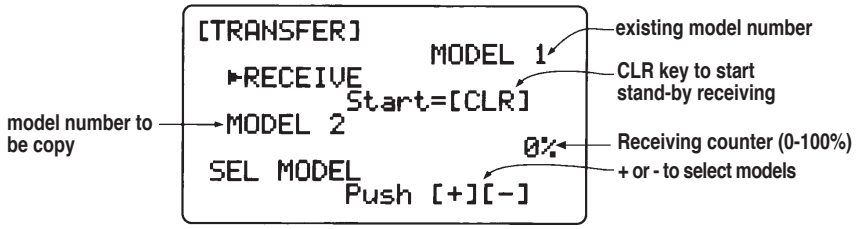

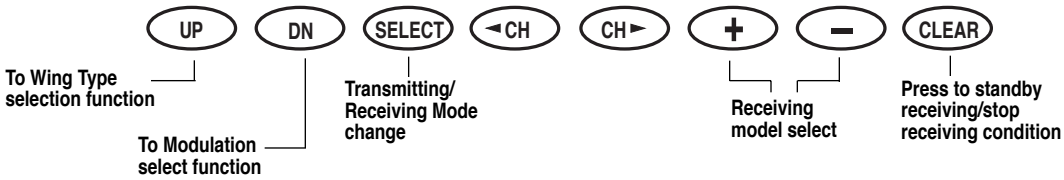

When the receiving counter is stopped or you see ERROR indicated, check the DSC cord connections or trainer cord conditions and try again. When data has been received correctly, you will see [End ok!] display. Be sure that the receiving mode transmitter is in stand-by condition first. Then on the transmitting transmitter press the CLR key to start transmitting.

Also ensure that when transferring is complete, previous data stored in the receiving side transmitter is replaced by the new data transferred.

Note: This function does not work when the battery alarm is flashing (low battery).

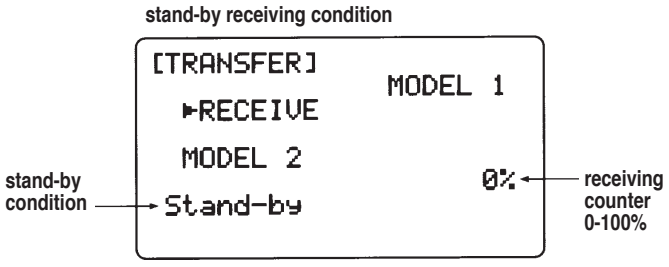

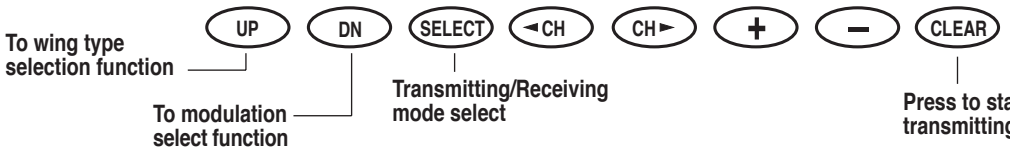

3.11 Wing Type Selection (System Set-Up Mode)

The purpose of Wing Mixing or Wing Type Function is to eliminate mechanical or programmable mixes that would otherwise be necessary for the proper flight of certain styles of aircraft. There are three wing types from which to choose; select the one that best suits your R/C aircraft. They are as follows: Normal, flaperon, and elevon (delta). Each of the wing type selections will be covered in a separate section.

Normal Wing Type Selection

This is the first wing type selection that appears on your LCD display. Use this wing type with common aircraft that utilize only one servo for both ailerons.

Flaperon Wing Type Selection

Flaperon allows you to use the existing ailerons as flaps. The ailerons can be raised or lowered in unison as flaps, yet still remain fully operational as the ailerons of your R/C airplane.

Flaperon Connections

Connect the left aileron to AUX1 RX port and right aileron to AILE servo port. In System Set-Up Mode, press the UP or DN key to select the Wing Type function. Then press the UP and DN keys simultaneously to access Wing Type function. Press either the + or - key to access the flaperon wing type selection. Note that each servo's operational value is automatically set for 75%. The applicable channels' travel adjustment is used to adjust the individual servo throw; while the combined aileron travel is adjusted with the aileron dual rate. It is also possible to set aileron differential. Reverse switches are applicable for each servo. Neutral adjustments of each servo are made by the Sub-Trim Function.

Elevon Wing Type Selection

Elevon, or delta as it is commonly known, is the final wing mixing selection in your XP8103. This style of aircraft also employs two wing servos. However, in essence, there is not an elevator present. Instead, at an elevator stick input, the two wing servos function in conjunction with one another to create an up/ down movement of the aircraft. In other words, the wing itself functions as if it were the elevator. Also, when an aileron control is given, the two wing servos move in opposite directions to function as ailerons.

Elevon Connections

Link the left moving control surface to the AILE servo port and the right moving control surface to the ELEV servo port. Press either the + or - keys to access the Delta (Elevon) type wing selection. Each servo's operational value is set automatically at 75%. The applicable channels' servo travel is adjustable by using the travel adjust. Aileron and elevator travels are adjusted using aileron and elevator dual rates. It is also possible to set aileron differential. Reverse settings should be made by each applicable servo. Each servo's neutral adjustment should made by the Sub-Trim Function.

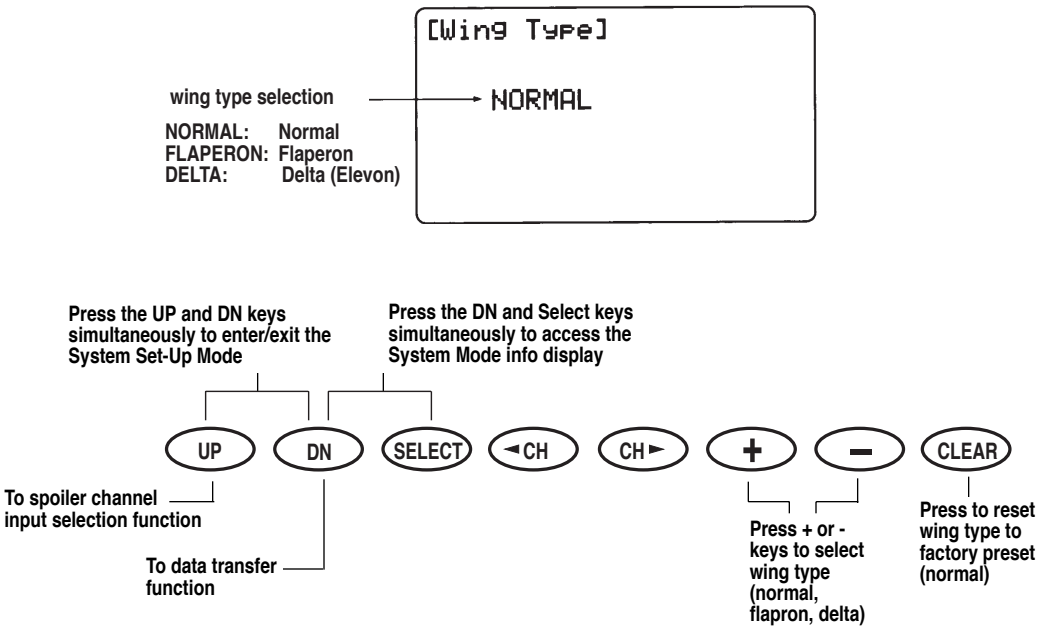

3.11 Wing Type Selection (System Set-Up Mode), cont.

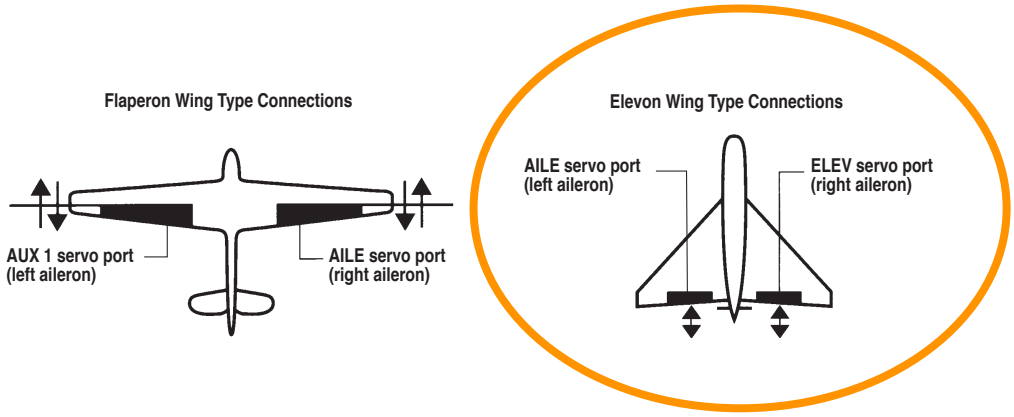

3.12 Spoiler Channel Input Selection (System Set-Up Mode)

The purpose of the Spoiler Channel Input Selection Function is to assign the activation device for the AUX2 channel. The knob provides proportional control, while the switch allows ON/OFF function of the AUX2 channel.

In System Set-Up Mode, select Spoiler Function and access by pressing the UP and DN keys simultaneously.

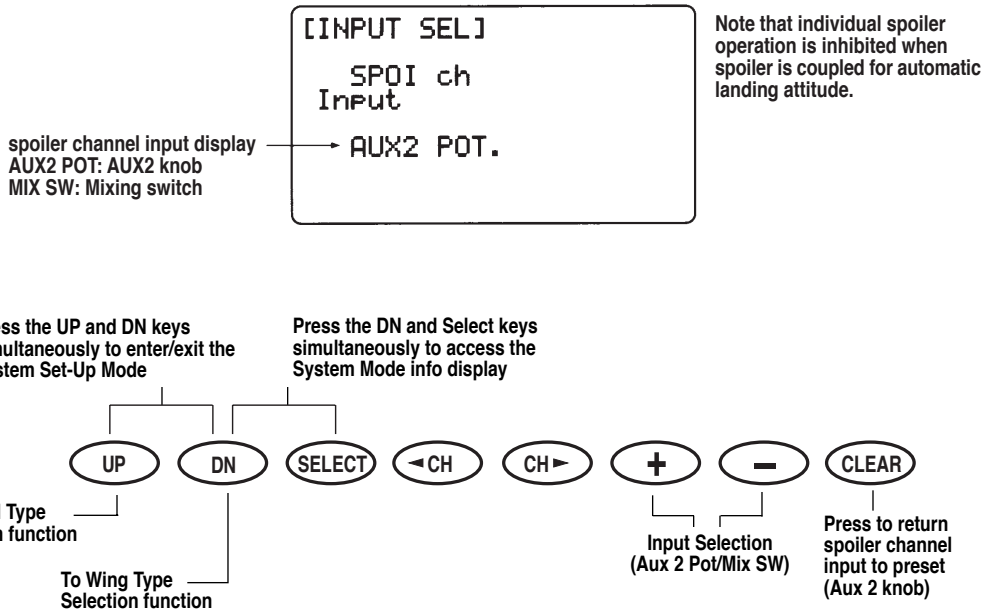

4. Function Mode Functions

4.1 Dual Rate, Exponential (Function Mode)

Dual rates are available for the aileron, elevator and rudder channels of your R/C airplane. The amount of travel is adjustable from 0-125%; exponential is adjustable from 0% (LIN) to 100% in 1% increments. The factory setting, or default value, for both the 0 and 1 switch positions is 100%. Either switch position may be selected as the low or high rate by placing the switch in the desired position and adjusting the value accordingly. There is also an automatic rudder dual rate setting for the rudder.

Dual rates can be defined as the ability to vary the travel or throw rate of a servo from a switch. Due to differing travel rates, you will find that the sensitivity of the control either increases or decreases accordingly. A higher rate, or travel, yields a higher overall sensitivity. You may find it easier to think of the Dual Rate Function as double-rated or half-rates.

The Dual Rate Function works in conjunction with the Exponential Function to allow you to precisely tailor your control throws.

In Function Mode, use the UP or DN key to select Dual Rate and access by pressing the UP and DN keys simultaneously.

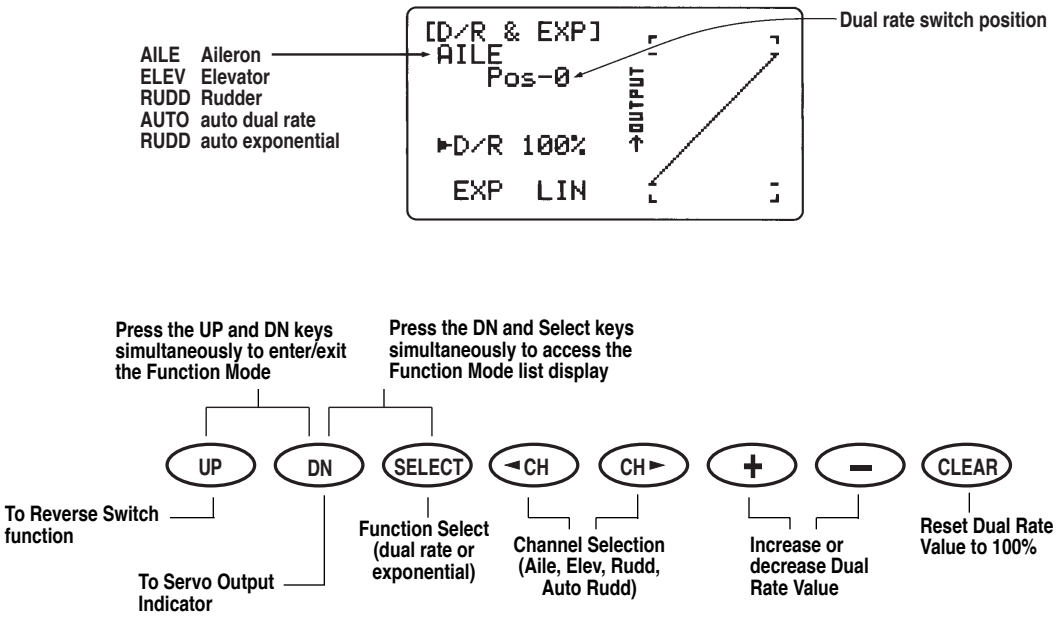

4.2 Automatic Dual Rate, Exponential (Function Mode)

When the Automatic Rudder Dual Rate Function is active, the throttle stick position automatically switches among the rudder dual rates that you have selected in the Dual Rate Function. This means that, as you advance or pull back the throttle stick, the rudder travel rates automatically change. When the throttle stick is moved in any position from low to approximately 70% of full travel, the 0 rudder rate is active; once the throttle is fully advanced, the 1 rudder travel will automatically return.

Once the Automatic Dual Rate Function has been activated, the word AUTO will appear on the rudder D/R/ EXP screen.

Automatic Rudder Dual Rate Setting

Suggested rudder dual rate settings are as follows:

Dual Rate Switch Position

0 Position (maximum servo travel)

1 Position (minimum servo travel)

Example: 0 position value is set to 100%; 1 position value is set to 80%.

Note: The Rudder Dual Rate Switch must be in the rearward (0) position for the auto dual rate to function.

To enter the Auto Dual Rate function, from the Dual Rate and Exponential Rate function, press the CH key until AUTO RUDD appears. Press the + key to activate the Auto Rudder function. Next, adjust the Rudder Dual Rate as described in previous section.

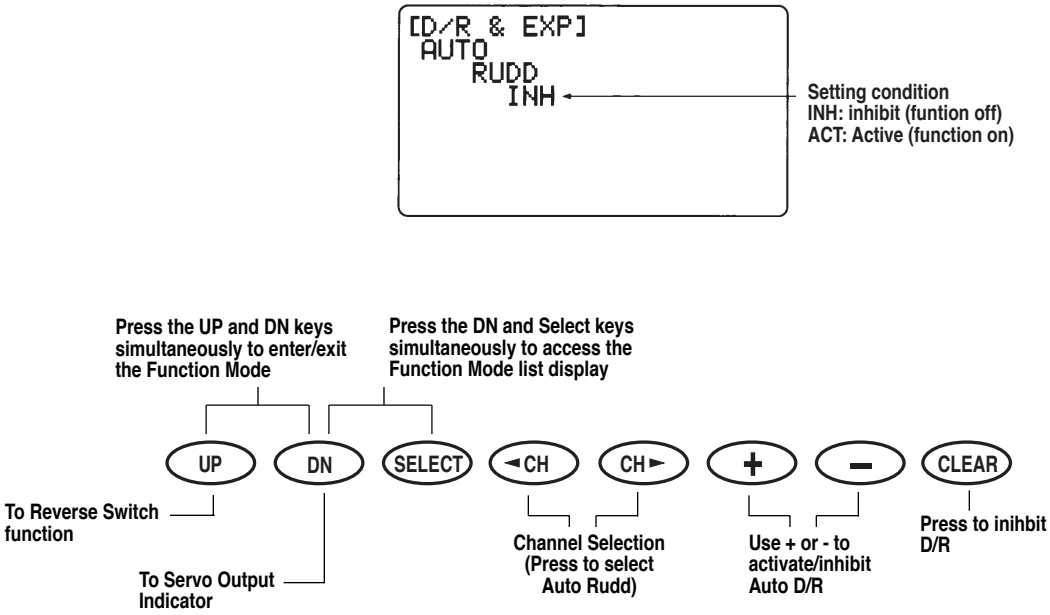

4.3 Reverse Switch (Function Mode)

The Reverse Switch is an electronic means of reversing the throw (direction) of a given channel (servo). All eight channels of the XP8103 offer reversible servo direction. This will ease set-up during servo installation in your aircraft.

In Function Mode, use the UP or DN key to select the Reverse Switch function and access by pressing the UP and DN keys simultaneously.

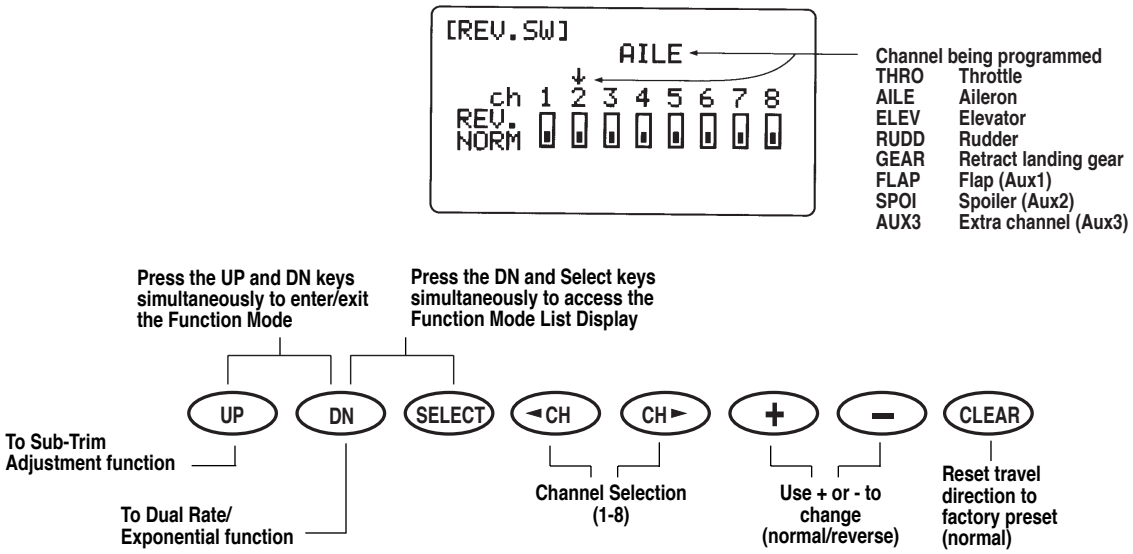

4.4 Sub-Trim Adjustment (Function Mode)

The Sub-Trim Adjustment Function allows you to electronically fine tune the centering of your servos. Individually adjustable for all eight channels, with a range of + or - 125% (+ or - 30 degrees servo travel).

Caution: Do not use excessive sub-trim adjustments as it is possible to overrun your servo's maximum travel.

In Function Mode, use the UP or DN key to select the Reverse Switch function and access by pressing the UP and DN keys simultaneously.

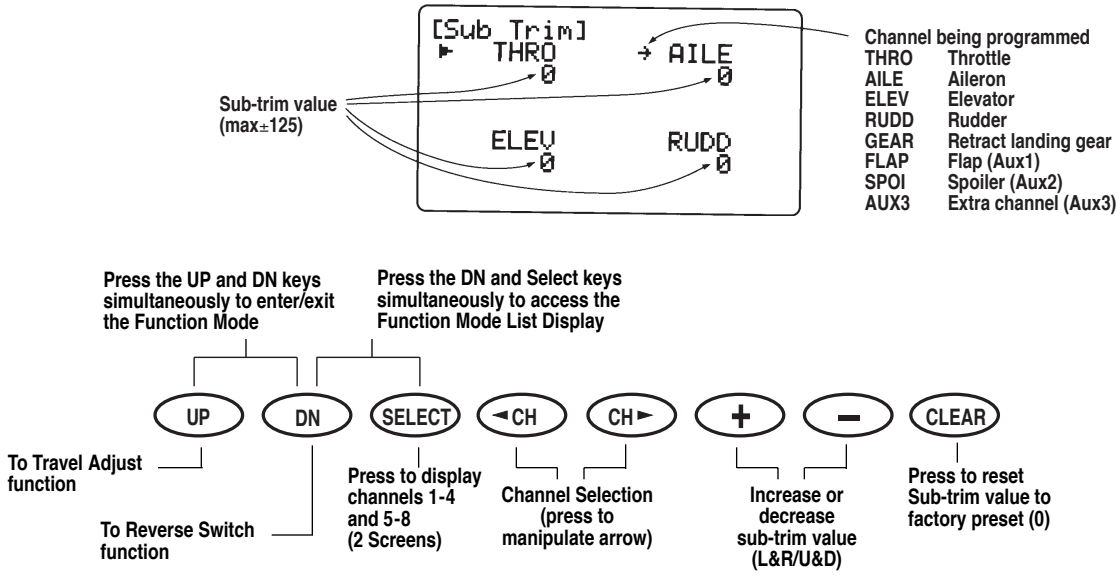

4.5 Travel Adjust (Function Mode)

The purpose of Travel Adjust, also known as endpoint adjustment or adjustable travel volume, is to offer you precise servo control deflection in either direction of servo operation. The travel adjust range is from 0-150% (0 degrees to 60 degrees) from neutral and it can be adjusted for each direction individually. The factory default (data reset) value is 100% for each direction of servo travel.

In the Function Mode, use the UP or DN key to select the Travel Adjust function and access by pressing the UP and DN keys simultaneously.

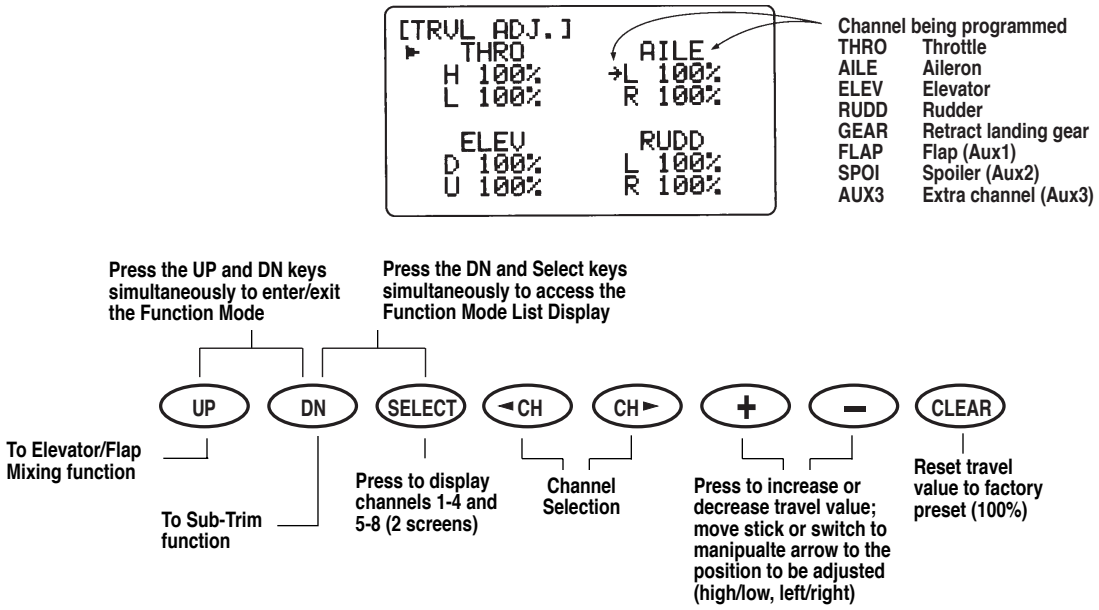

4.6 Elevator to Flap Mixing (Function Mode)

The upper-most position of the flap mixing switch activates the Elevator to Flap Mixing Circuitry. When this system is active and a value of flaps is input, the flaps will be deflected each time the elevator stick is used. The actual flap movement is independently adjustable for both up and down elevator. The most frequently used application is up elevator/ down flaps and down elevator/ up flaps. When used in this manner, the aircraft pitches much more quickly than normal. When you want to reverse the mixing directions, press the - key and change the mixing value from + to - (or - to +).

In the Function Mode, use the UP or DN key to select the Elevator to Flap Mixing function and access by pressing the UP and DN keys simultaneously.

Note: The flap mixing switch must be in the upper postion to adjust values.

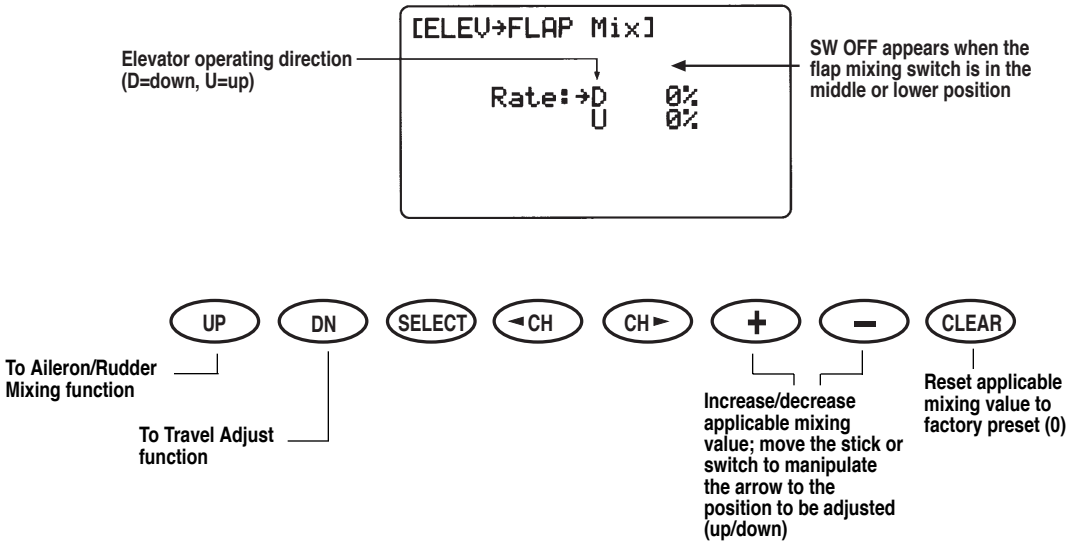

4.7 Aileron to Rudder Mixing (Function Mode)

This form of mixing is designed so that when input to the aileron stick is given, the rudder servo will also move, eliminating the need to coordinate these controls manually.

When adjusting, if an opposite mixing direction of the rudder servo is required, simply press the + or - key and change the mixing value from + to - or - to +. This will reverse the mixing direction of the rudder from its original direction.

Switch	Function
ON	Mixing Always ON
MIX	Switch ON / OFF Using Mixing Switch
Land	Switch ON / OFF Using Landing Switch
ELE>F	Switch ON / OFF Using Elevator to Flap Mixing

Mixing Operation and Switches

This mixing program can be turned ON / OFF by a switch. The switches that can be selected are shown on the chart at right, with their abbreviations as they appear on the screen and the corresponding switch positions.

In the Function Mode, use the UP or DN key to select Aileron to Rudder Mixing and access by pressing the UP and DN keys simultaneously.

To adjust, move the arrow to SW with the CH key and select the needed switch setting using either the + or - key.

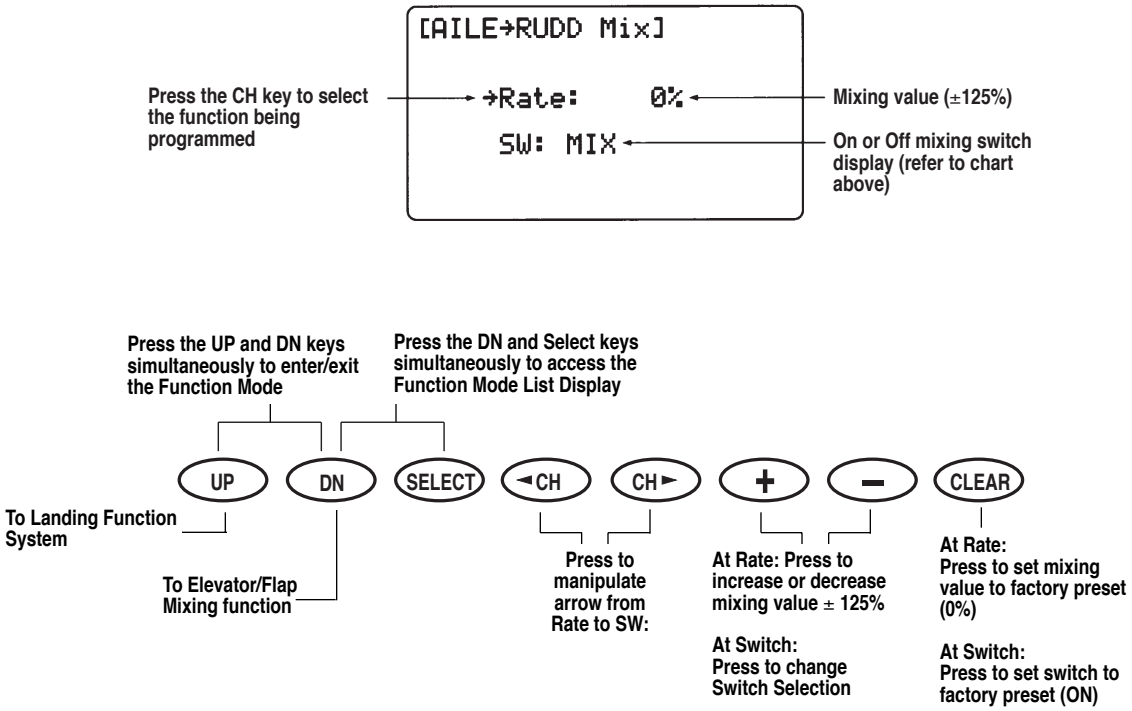

4.8 Landing System (Function Mode)

The purpose of the landing system is to set the aircraft in a landing attitude for more consistent landings. This is accomplished by selecting values for the elevator, flap and spoiler — AUX2 (if active) — to be activated when the land switch is engaged. Note that the spoiler (AUX2) can be mixed in with the elevator and flap landing attitudes, but only in the deployed or retracted positions. The landing system can also be activated by a preset position of the throttle stick. Refer to the Automatic Landing Attitude Section for more information on how to select the preset throttle position.

Accessing and Utilizing the Landing System Feature

To access the landing system feature (refer to figure A):

1. Place the transmitter power switch in the ON (upper position).

2. Press the UP and DN keys simultaneously to enter the Function Mode.

3. Press either the UP or DN keys until "LANDING" appears in the upper left portion of the LCD.

4. Press either the left or right CH key to position the cursor at the desired function (i.e., ELEV, FLAP, SPOI, AUTO).

5. Press the + or - keys to set the value for flap and elevator travel. The + key adds up flap/ elevator and the - key adds down flap/ elevator. The input is adjustable from 0-250% for flap and 0-125% for elevator. This results in a flap input from 0-60 degrees and an elevator input from 0-30 degrees.

Spoiler Coupling

Auxiliary 2 serves as the spoiler channel. Note that the spoilers can be mixed in with the elevator and flap inputs, but only in the deployed or retracted positions.

To activate Spoiler Coupling:

1. From the Flap Landing Value setting press either the left or right CH key, moving the cursor to SPOI.

2. Press the + or - key to activate the spoiler.

Adjustment of the deployed and retracted positions of the spoiler (AUX2) is made through the Travel Adjustment (TRVL ADJ) menu.

Automatic Landing Attitude

When the Automatic Landing Attitude Function is active, the throttle stick will activate the landing system you have just set up. Any point of throttle stick travel can be set as the "auto-land" point. Once the throttle stick passes through this point and the LAND switch is in the ON, or down, position, the landing system will be activated. Thus, the elevator, flaps and spoilers would be activated, if all were selected. If the flap mixing switch is not in the LAND position, the throttle stick operation would have no effect on the landing system.

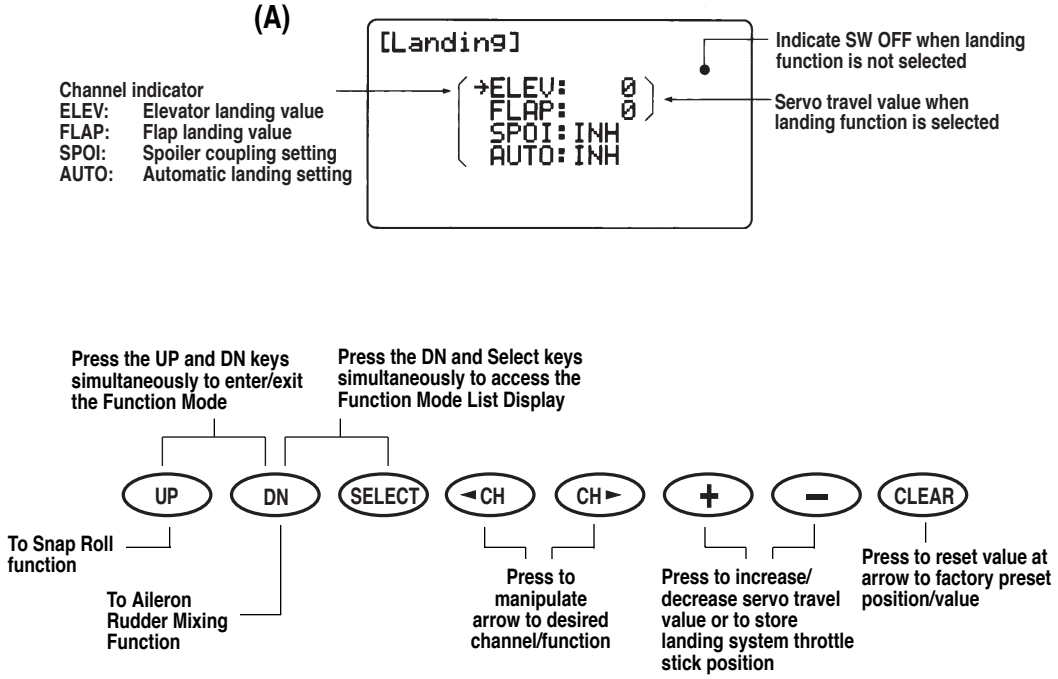

4.8 Landing System (Function Mode), cont.

To activate the Automatic Landing feature (refer to Figure B):

1. From the Spoiler value setting, press either the left or right CH key, moving the cursor to AUTO.

2. Move the throttle stick to the desired position and press either the + or - key to activate the Automatic Landing System. To change this value, move the stick to a new position and press the + or - key. To clear the auto land point, press CLR and the display will return to INH.

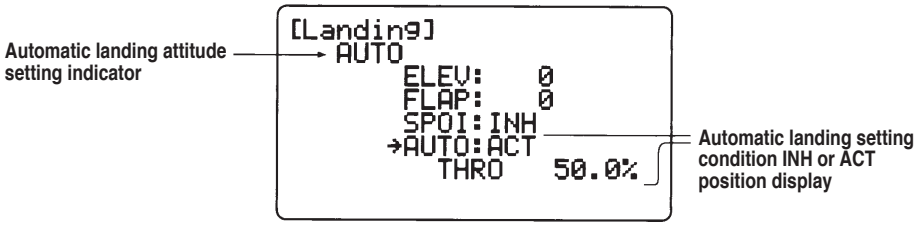

(B)

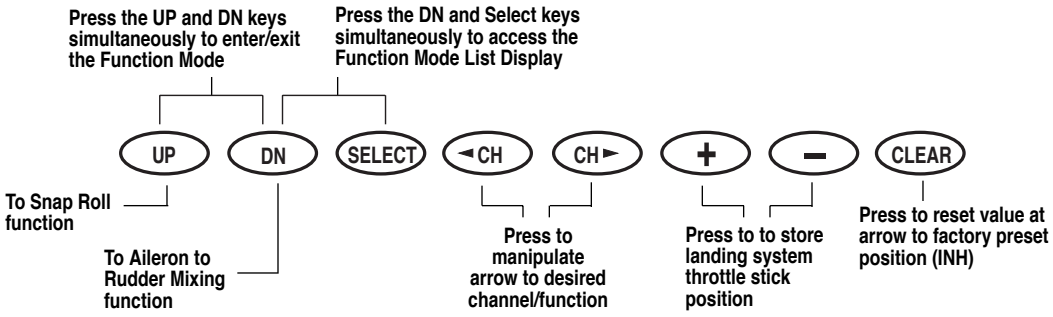

4.9 Snap Roll (Function Mode)

The Snap Roll Function allows for easy and consistent snap rolls at the touch of a switch. The XP8103 offers four separate directions of snap rolls that can be selected by using the keys located on the front of the transmitter.

Selectable snap rolls are as follows:

R-D	Snap Roll Right and Down
R-U	Snap Roll Right and Up
L-D	Snap Roll Left and Down
L-U	Snap Roll Left and UP

The Snap Roll Switch affects the aileron, elevator and rudder only; all other functions work normally. While the snap roll switch is activated, the related sticks will not operate until the switch is released. When this function is inhibited, the display will show INH and the snap roll system will not operate. Individual adjustment is available for each control surface in either direction. (Refer to Figures A - C for set-ups)

In the Function Mode, use the UP or DN key to select the Snap Roll Function and access by pressing the UP and DN keys simultaneously.

Snap Roll Direction Change

Once the snap rolls are established in the Function Mode, they can be selected using the UP/ DN and +/ - keys located on the front of the transmitter while in the normal display. Refer to Figure 4.9C. The adjustable range for each function is 0-125%; the factory default is 100%. When the Snap Roll Function is active, the direction will be indicated in the normal display (figure C).

(4.9A)

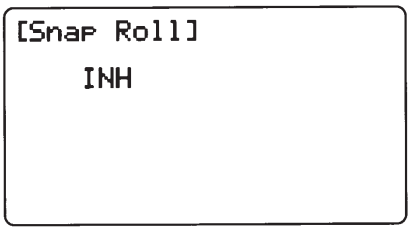

(4.9B)

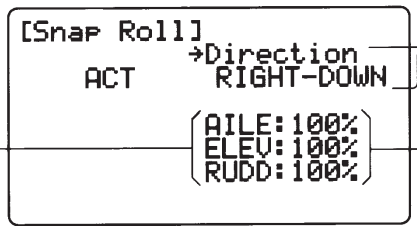

Direction Indicator (this example shows right down snap roll)

Channel Indicators

Operating value of each functions (0–125%)

Press the UP and DN keys simultaneously to enter/exit the Function Mode

Press the DN and Select keys simultaneously to access the Function Mode List Display

To Differential Aileron Mixing (if activated) or Trim Offset Memory

To Landing System Mode

Press to manipulate arrow to desired channel/function

Press the + or - keys to activate Snap Roll function, to increase/decrease operating values and to select Snap Roll directions

Press to reset operating values at cursor, or to inhibit function when cursor is at "Direction"

(4.9C)

Snap Roll Direction Change
(For Normal Display)

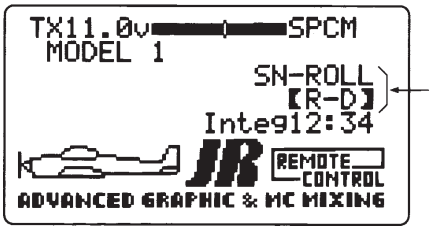

Note: Display will change when Snap Roll direction changes are made.

Direction of Snap Roll
R-D Right Down Snap Roll
R-U Right Up Snap Roll
L-D Left Down Snap Roll
L-U Left Up Snap roll

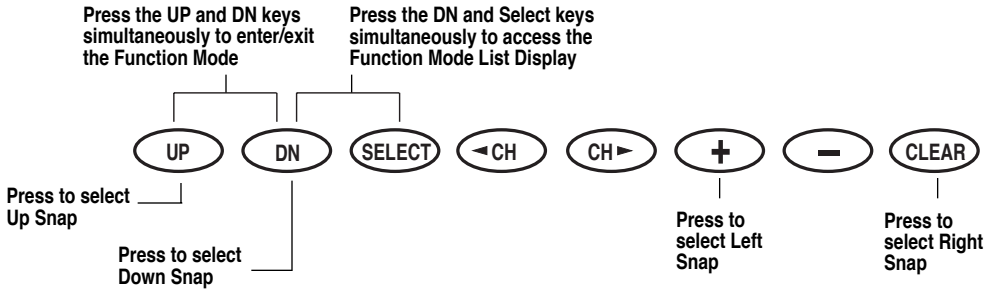

4.10 Differential Aileron Mixing (Function Mode)

In order to use the Differential Function, flaperon or elevon (Delta), wing mixing must be selected in the Model Set-Up Mode and two servos must be used to operate the ailerons (one on each). In the Function Mode, use the UP or DN key to select Differential Aileron Mixing and access by pressing the UP and DN keys simultaneously.

Refer to the figure below for set-up.

Note: The Differential Aileron Mixing Function will only be shown in the Function Mode if either Flaperon or Delta wing types have been previously selected in the System Mode. (pg. 34 Section 3.11)

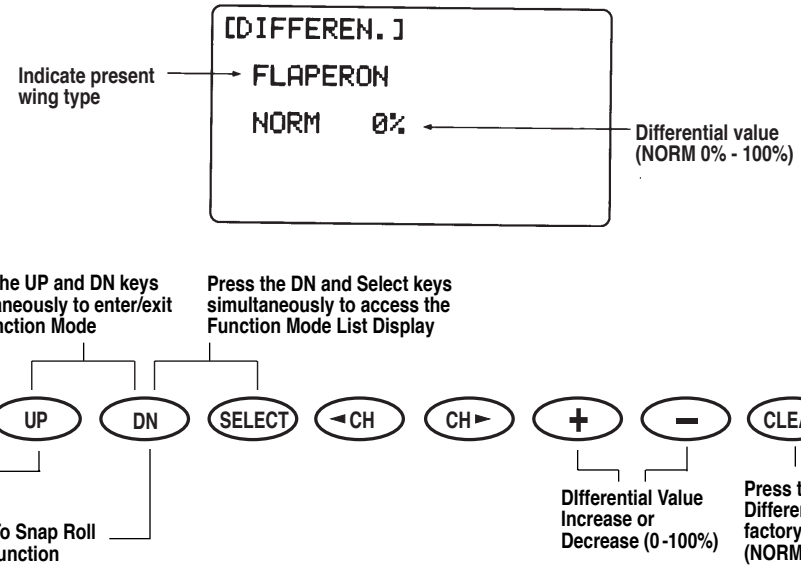

4.11 Trim Offset Memory (Function Mode)

The Trim Offset Memory Function allows you to test fly your aircraft and correct for any built-in trim requirements. After you adjust the aileron, elevator and/ or rudder trim levers during test flights, the trim levers are no longer in their center, or neutral, positions. The use of trim offset allows you to return them to their central or neutral positions without readjusting the linkages.

This function is very important when switching from model to model. It allows your trims to remain in their neutral positions. With the use of this function, you can easily switch among the 10 model memories without readjusting for each airplane's trim positions.

In the Function Mode, select Trim Offset Memory using the UP or DN key and access by pressing the UP and DN keys simultaneously.

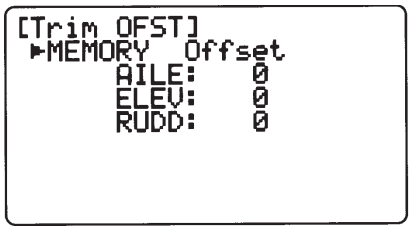

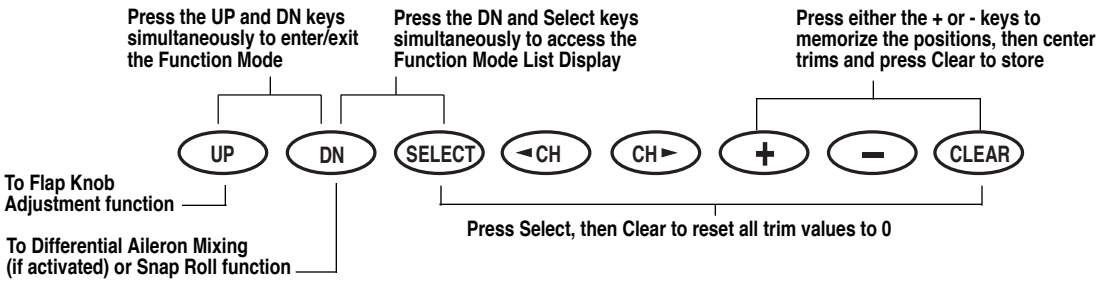

Setting Trim Offset

Example: aileron trim. Trim is offset to left. Access the Trim Offset Function and see Figure 1 below.

At this time, press the + or - keys and the display shows (2) and memorizes the existing position. Next, return trim to center and press the CLR key. Display shows (3) and memorizes the trim offset value and the servo is returned to its first trim position.

Note: If trim is not returned to the center, the trim memory position will not be stored.

Note: If the offset value is too large, a warning will sound when you return the trim levers to center, and the display shown in (4) will appear.

At this time, you should return the applicable trim lever to the corrected position. OVER will disappear from the LCD. It is easy to recognize the applicable trim channel as it will be the one next to where OVER appears on the LCD.

Press the CLR key to clear the trim offsets from the transmitter's memory. It is recommended that you adjust the applicable mechanical linkage accordingly.

To clear the trim offset adjustments, press the Select key and then the CLR key. The display will appear as Figure 5.

To exit from Trim Memory Offset, press the UP and DN keys simultaneously to exit the Trim Memory Offset function.

4.11 Trim Offset Memory (Function Mode), cont.

①
```
[Trim OFST]
▶MEMORY  Offset
      AILE:   0
      ELEV:   0
      RUDD:   0
```

②
```
[Trim OFST]
▶MEMORY  Offset
      AILE:   0
      ELEV:   0
      RUDD:   0

 Move TRIM to center
        & Push [CLR]
```

③
```
[Trim OFST]
▶MEMORY  Offset
      AILE:L 10
      ELEV:   0
      RUDD:   0
```

④
```
[Trim OFST]
▶MEMORY  Offset
      AILE:   0  OVER
      ELEV:   0
      RUDD:   0

 Move TRIM to center
        & Push [CLR]
```

⑤
```
[Trim OFST]
▶CLEAR   Offset
      AILE:   0
      ELEV:   0
      RUDD:   0

 All clear ?
      Yes=Push [CLR]
```

4.12 Flap Knob Adjustment (Function Mode)

Flap Knob Operating Adjustment

The Flap Knob Operating Value Adjustment Function allows adjustment of the operational value of the flap channel (AUX1) using the flap adjustment knob. The factory preset values are as follows: Trim 30%; INH 0%; and Full 100%. These are merely starting points. They can be changed to any value using the + or - keys. This function makes fine tuning of the flaps very easy.

In the Function Mode, use the UP or DN key to select Flap Knob Adjustment and access by pressing the UP and DN keys simultaneously.

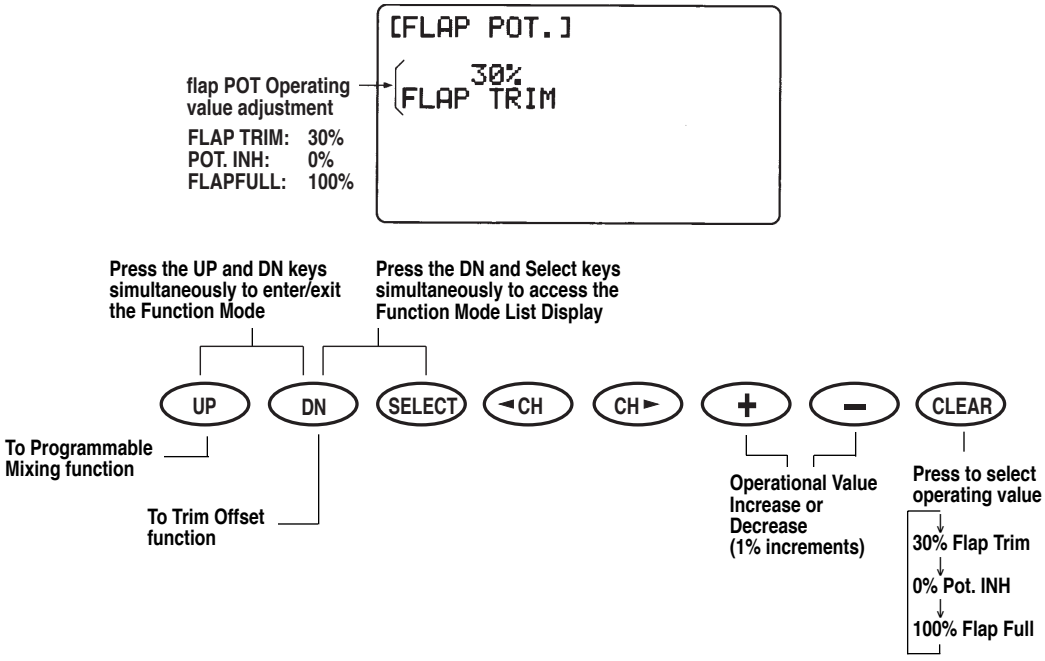

Accessing the Programable Mixing Functions

Place the transmitter power switch in the ON position. Press the Mode UP and DN keys simultaneously to enter the Function Mode. Press either the UP or DN keys until PROG. Mix 1 appears in the upper left portion of the LCD (refer to figure below).

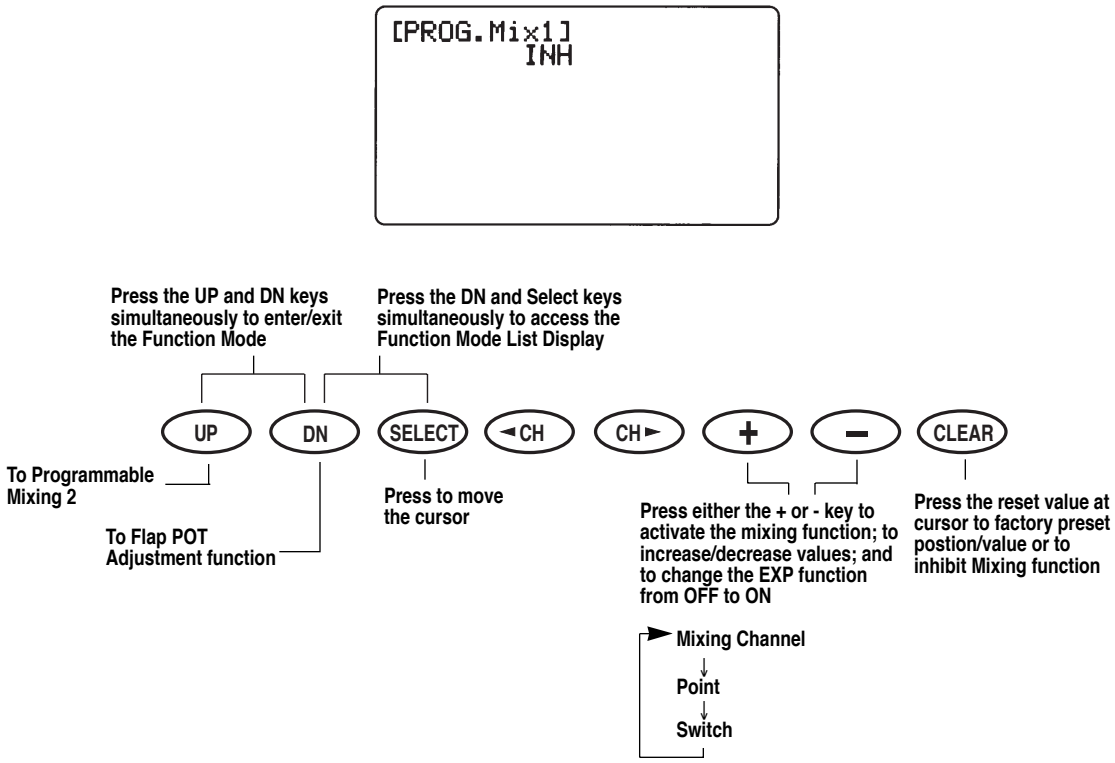

The XP8103 offers six (6) programmable mixes to be used for a number of different purposes. The functions allows mixing any one channel to any other channel.

The mix can remain ON at all times, or be switched OFF in flight using a number of different switches. (Refer to figure 4.13B). Each channel is identified by a four character name (i.e., Aileron - AILE, Elevator - ELEV, etc.). The channel appearing first is known as the "master channel," or the channel to which you want to mix. The second channel is known as the "slave channel," or the channel that is being mixed into the master channel. For example, AILE - RUDD would indicate aileron to rudder mixing — each time the aileron stick is moved, the aileron will deflect, and the rudder will automatically move in the direction and to the value input. Mixing is proportional, so small inputs of the master channel will produce small outputs of the slave channel. Each programmable mix has a mixing "offset." The purpose of the mixing offset is to redefine the neutral position of the slave channel.

(4.13B)

SW Indicate	Switch Lever Position When Mixing Is On
ON	Mixing Always On
MIX	Mixing Switch Toward Self
LAND	Flap Switch In land Position
ELE>F	Flap Switch In ELEV Position
GEAR	Retracting Landing Gear SW Toward Self

Multi-Point Programmable Mixing

Programmable mixes 1 and 2 have the capability for multi-point programmable mixing. The graphic mixing curve, located on the right side of your screen, indicates the mixing curve selected and is a useful reference tool when adjusting or storing points. Up to 5 points can be stored, and these points can be moved independently to any desired servo position from 0 to 100%. (Refer to figure 4.13C).

Assigning Channels

Using the SEL key, move the cursor to the left of the master channel. Press the left or right CH keys to position the cursor below the master or slave channel. Press the + or - keys to select the desired channels.

Operating with a Switch

Pressing the SEL key, position the cursor to the side of SW : and using the + or - keys select the desired switch for the particular program mix being used. Refer to figure 4.13B.

Assigning Mixing Values

Position the cursor to the left of "Point" and press the left or right CH keys to reverse the position point. Increase or decrease the mixing value using the + or - keys or the CLR key. When you wish to reverse the mixing direction, press the - key to increase the minus value to the desired position. To activate point 1 or 3 with "IN H" displayed, press the + or - key at that position to display mixing value. Press the CLR key if you want to inhibit mixing. Mixing value "0" can be set at points L, 2, and H by pressing the CLR key.

(4.13C)

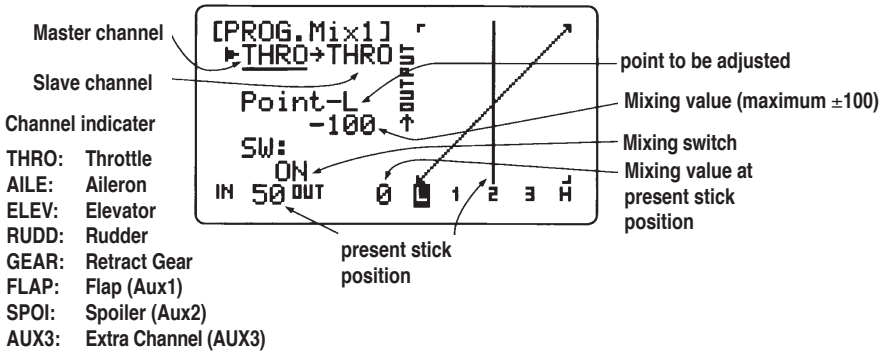

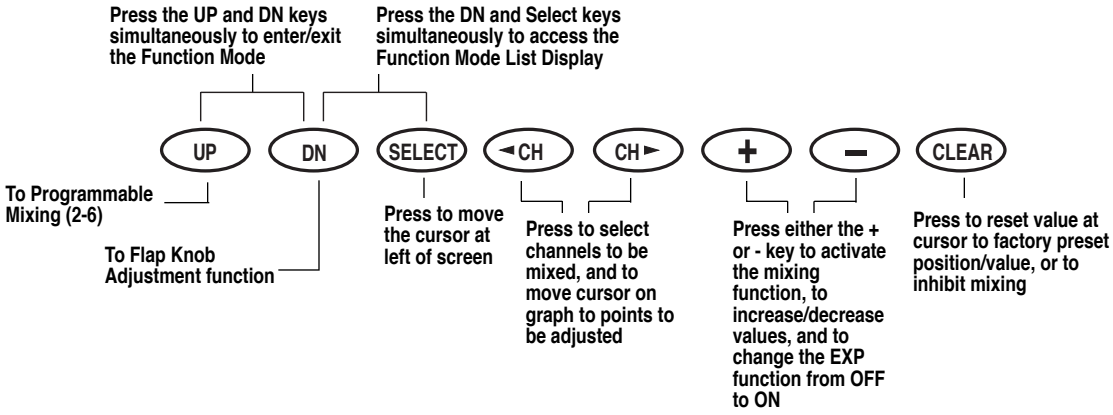

Exponential Function

An exponential function allows you to "smooth" the selected curve. With the cursor at the “point” position, press the left or right CH key until EXP is indicated. Exponential is activated by pressing either the + or - key (Refer to figure 4.13C).

Standard Programmable Mixing (3-6)

For switch assignments refer to Chart 4.13B on the preceeding page. Determine the master and slave channels required for mixing. Using the UP - DN keys, select PROG. Mix3. Using the SEL key, position the cursor next to the channels being mixed. Using the left or right CH keys, position the cursor under the master/ slave channel, and using the + or - keys, select the master and slave channels to be used for mixing.

Using the SEL key, position the cursor next to Rate:. To establish the mixing value, move and hold the master channel control (up, down, left, or right) and set the slave servo mix value by pressing either the + or - keys. To reverse the direction of the slave mix, press the opposite of the + or - key until the value of the mix is set in the reverse direction.

Establishing Offset

The purpose of the mixing offset is to redefine the neutral position of the slave channel. Any desired position may be set for the offset reference point. Pressing the SEL key, position the cursor to Offset:. Determine the master channel and move the master channel control stick to any desired position. Press the CLR key to memorize this position. The offset value (offset value from servo travel center) is now determined; however, the reference point mixing value is zero.

Mixing with Trim

Whenever the master channel is aileron, elevator, rudder, or throttle, you have the option of allowing the master channel’s trim lever to mix into the slave channel. The Mixing with Trim Function is always activated in Program Mixes 5 and 6.

You can observe the operation by watching the slave channel while moving the master channel’s trim lever.

Include Mixing

When the master channel’s operating value is combined with another programmed value, it’s called including mixing. For example, MIX 1 is aileron to elevator, MIX 5 is elevator to rudder, MIX 5’s elevator operating value is included and MIX 1’s aileron and elevator value includes the rudder value also.

Functions Related to Program Mixing

- When using aileron, elevator or rudder for the master channel and dual rate/ exponential is selected, mixing also includes dual rate and exponential.
- When selecting flaps for the master channel, flap operations are different, depending on mixing.
- During snap roll operations, Programmable Mixing Function 2, 4, 5, and 6 are inhibited when the master or slave channels are aileron, elevator, or rudder. In Programmable Mix 5 and 6 when the master channel is aileron, elevator or rudder, Include Mixing is activated.
- By using Programmable Mix 5 or 6, the elevator can be operated using two servos because the Trim Function is activated.

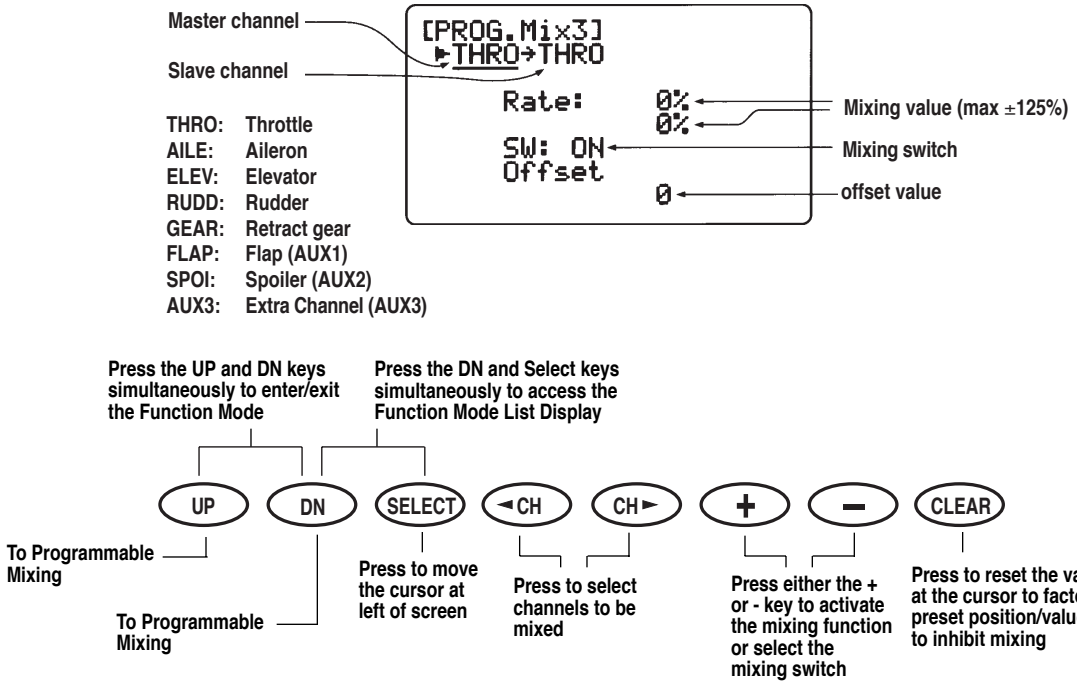

4.14 Fail-Safe/Hold (Function Mode)

The Fail-Safe/ Hold Function is available only when you use the XP8103 transmitter in either of the PCM modulations — S-PCM or Z-PCM. This function is designed to help minimize damage to your airplane during a loss of signal to the receiver. The servos either assume the fail-safe presets or hold the last good signal position.

Note: In the PCM modulations, the Fail-Safe/ Hold Function cannot be totally disabled so that the servos will react to interference in the same way as they do in a PPM system. This is only possible with the use of a PPM receiver and the transmitter in the PPM modulation.

Note: Since the actual screen appearance varies, depending on the modulation of your radio, refer to the appropriate modulation section which follows (Z-PCM, S-PCM).

As noted earlier, if you are in the PPM modulation, the Fail-Safe/ Hold Function is not applicable. Therefore, the Fail-Safe/ Hold Function will not appear on your LCD in the PPM mode.

Refer to the Modulation Selection Section for more information pertaining to the broadcast signal of your XP8103 airplane transmitter.

Accessing the Fail-Safe/Hold Function in Z-PCM Modulation

Hold (Z-PCM)

The Hold Function is automatically activated when the radio is turned ON and is in the Z-PCM modulation.

This function stops (or holds) the servos in the positions they were in just prior to the interference. Therefore, your airplane maintains the position held immediately before the interference was experienced. When a clear signal is restored, the Hold Function releases, and control of the airplane returns to you.

1. Place the transmitter power switch in the ON (upper) position.

2. While the power switch is in the ON position, press the UP and DN keys simultaneously to access the Function Mode.

3. Press either the UP or DN key until Fail-Safe appears in the left portion of your LCD.

Note: If Fail-Safe does not appear on your LCD, it is because you are transmitting in PPM. Fail-Safe is not applicable in the PPM mode. Refer to the Modulation Mode Selection Section for more information.

When the Fail-Safe Function is activated (i.e., when the signal is interrupted), the transmitter automatically moves each servo to a preset position. The position that each servo assumes is determined by you, as is the time length of interference that must occur before servo movement.

After the interference has ceased, control of the airplane returns immediately to you.

There are three time delays to choose from: 1/ 4 (0.25) second, 1/ 2 (0.50) second and 1.0 second. These time delays are the amount of time it takes, starting the moment the interference occurs, until the servos assume their preset positions.

Setting Fail-Safe/Hold Memory in Z-PCM Modulation

1. After accessing the Fail-Safe Function, it is time to adjust the Fail-Safe presets.

2. Select among the three time delays (1/ 4, 1/ 2 or 1.0 seconds). To do so, simply press the + or - key until the appropriate delay appears on the screen.

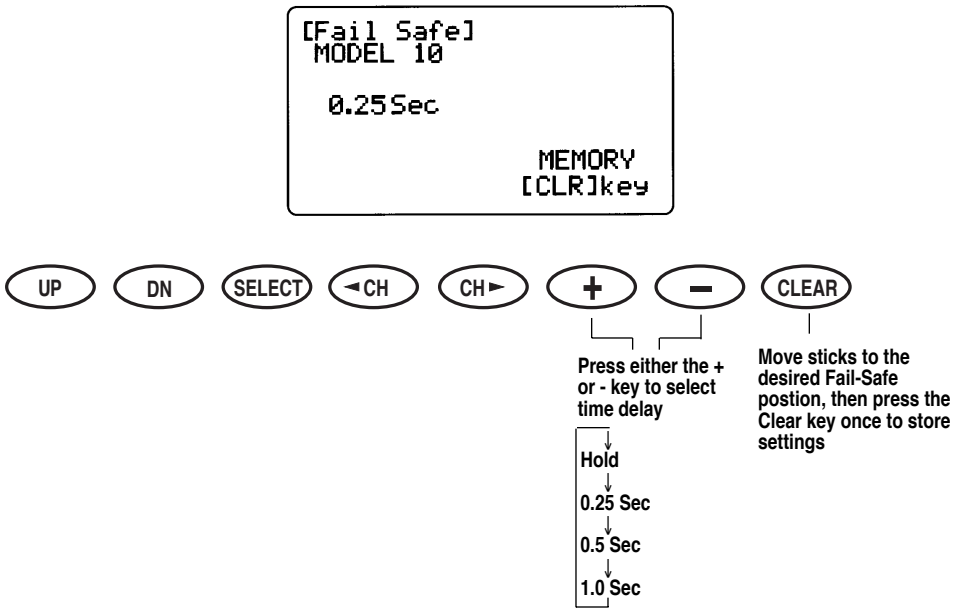

3. Hold the transmitter sticks in the position that you want the servos to assume during signal loss conditions. You can determine fail-safe preset positions for the other channels by placing the potentiometers and switches in the positions that you want them to assume during interference.

4. With the sticks, switches and potentiometers in the fail-safe positions, touch the CLR key. This will enter these locations as the fail-safe memory settings. A high pitched beep will indicate that this setting has been stored.

5. To confirm that the input of data was successful, switch the transmitter OFF. The controls will move to the input locations. If not, repeat step 4 again.

6. To exit the Fail-Safe Function, press the UP and DN keys simultaneously.

Note: These preset positions remain stored in the transmitter's memory until both the transmitter battery pack and the lithium back-up battery have been removed (or until data reset has been performed). Therefore, you do not have to reset the fail-safe each time you fly. Should you want to re-adjust the fail-safe presets, access the Fail-Safe Function and adjust the presets as you have just done. The transmitter automatically recalls the settings for the last fail-safe adjustment.

Accessing the Fail-Safe/Hold Memory in S-PCM Modulation

Hold (S-PCM)

The Hold Function is automatically activated when the radio is turned ON and in the S-PCM modulation.

This function stops (or holds) the servos in the positions they were in just prior to the interference. Therefore, your airplane maintains the position held immediately before the interference was experienced. When a clear signal is restored, the Hold Function releases, and control of the airplane returns to you.

1. Place the transmitter power switch in the ON (upper) position.

2. While the power switch is in the ON position, press the UP and DN keys simultaneously to access the Function Mode.

3. Press either the UP or DN key until Fail-Safe appears in the left portion of your LCD.

Note: If Fail-Safe does not appear on your LCD, it is because you are transmitting in PPM. Fail-Safe is not applicable in the PPM mode. Refer to the Modulation Mode Selection Section for more information.

Fail Safe/Hold Combination in S-PCM Modulation

The XP8103 allows you to combine the hold and fail-safe presets for all eight (8) channels on the receiver — you can select fail-safe or hold independently for all channels on your aircraft. In other words, some channels will hold their last clear signal position, while others assume the preset position. Once the fail-safe has been activated by signal interruption (interference), the transmitter automatically moves the servos to a preset position. The predetermined servo positions are set by you. In the S-PCM fail-safe, the time delay (the amount of time it takes, starting the moment the interference occurs, until the servos assume the preset positions) is fixed at .25, or 1/4, second.

After the interference has ceased, normal operation of the airplane returns to you immediately.

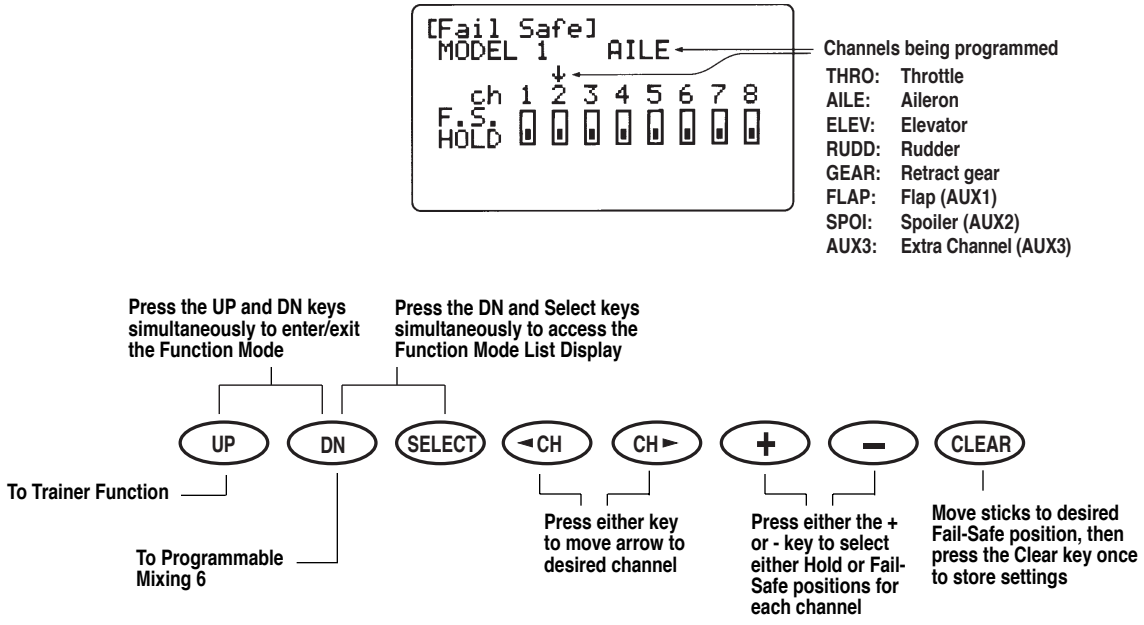

4.14 Fail-Safe/Hold (Function Mode), cont.

Setting the Fail-Safe/Hold Memory in S-PCM Modulation

1. After accessing the Fail-Safe Function, it is time to adjust the fail-safe presets.

2. Select all of the channels for which you want to enter a fail-safe preset. This is done by pressing the left or right CH key and moving the cursor arrow over the desired channel. Pressing the + or - key will cause the particular channel to assume a "hold" or "preset" fail-safe condition which is determined by positioning the particular control and pressing the CLR key. The transmitter will memorize the switch fail-safe position and automatically transfer the setting to the receiver.

3. Confirmation of proper fail-safe presets/ holds is made by turning the transmitter OFF and observing the aircraft's control functions.

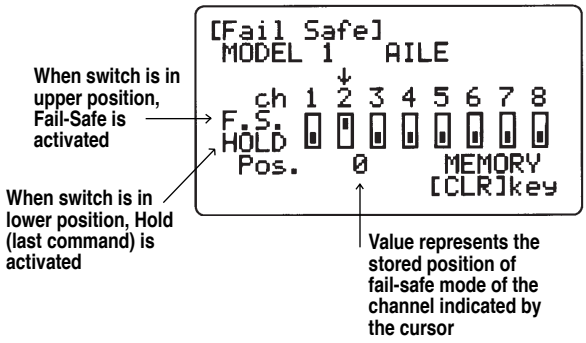

4.15 Trainer (Function Mode)

The XP8103 transmitter employs two separate types of trainer systems:

A. Normal trainer system — all functions are controlled by either the master transmitter or the slave transmitter.

B. Programmable function trainer — stick functions may be assigned to the slave one at a time. Since the control functions can be transferred one at a time, students can concentrate on only one function at a time until they are competent to fly solo.

Basic Connections and Limitations

1. The slave transmitter must be PPM (Pulse Position Modulation) with a DSC (direct servo control) jack. If the slave transmitter is PPM/ PCM selectable, select PPM. The master transmitter can be S-PCM, Z-PCM or PPM.

2. Plug the trainer cord into each transmitter's DSC jack. Note each transmitter will appear to be ON, but neither is actually transmitting at this time.

3. Switch the master transmitter ON. **Do not switch on the slave transmitter**; you must only have the master transmitter ON.

4. Pull the trainer switch on the master transmitter toward you to transfer control to the slave. Releasing the switch automatically reverts control to the master transmitter.

5. Be sure the slave transmitter servo reversing, dual rates, and point adjustment and trims are identical to the master transmitter. This can be checked by pulling the trainer switch toward you. If the control surfaces move, adjust the slave transmitter until the trainer switch can be activated without a change of the control surface position.

A. Using the Normal Trainer System

In this mode, all functions are switched from the master to the slave using the trainer switch. This is the normal mode. No function set-up (reversing switch or travel adjust) is necessary to activate this system.

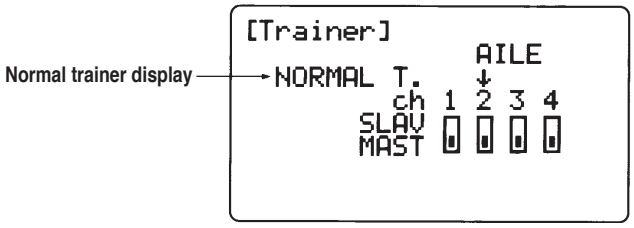

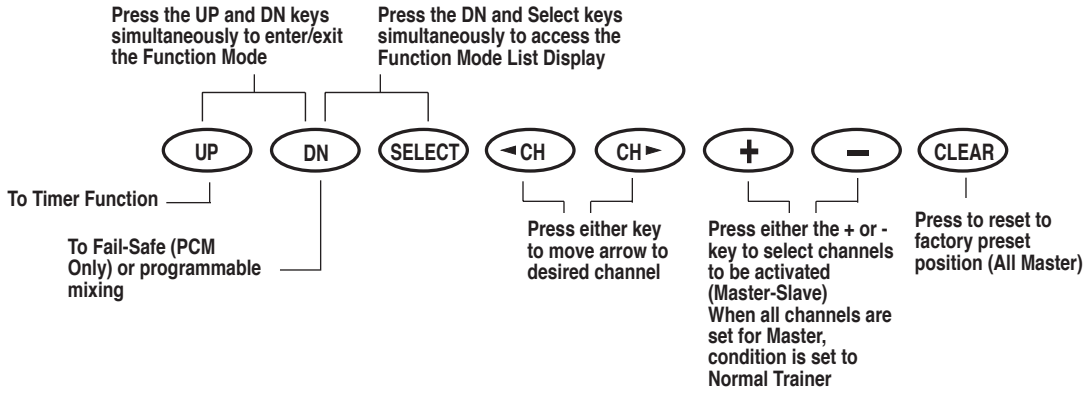

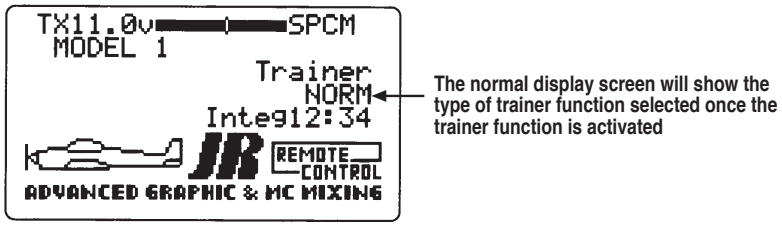

B. Use of Programmable Trainer Function

In this mode, the master may assign functions to the student one at a time to make learning to fly easier. For example, the master may assign the slave rudder and elevator. Then, when the trainer switch is activated (pulled toward you), the slave has control of only rudder and elevator while the master retains control of throttle and aileron.

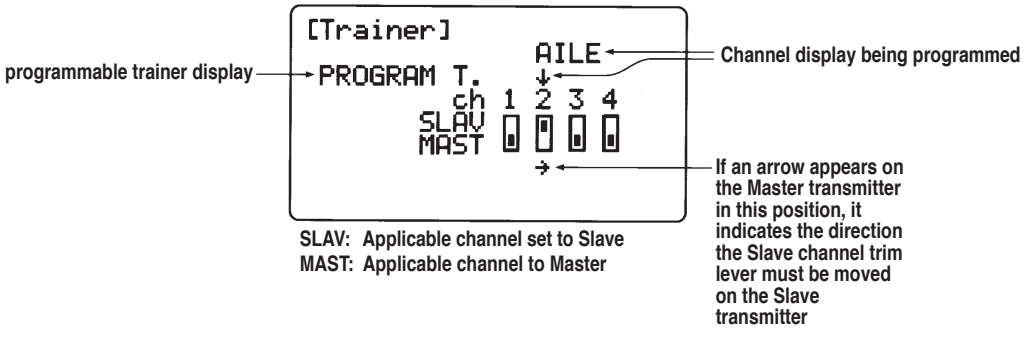

The XP8103 offers two separate types of timer functions — countdown and stopwatch. In the countdown mode, the transmitter will beep at 30 seconds. At zero, the time will begin counting up with a + indication. Up count will count up to 59:59 (59 minutes 59 seconds).

Count start and stop operations are activated by the snap roll/ trainer switch. But when using it as the trainer's master transmitter, start/ stop by this switch is inhibited.

Accumulated Time (Integrated)

Accumulated time is for each model and returns to zero at 100 hours. You can use them as individual model's maintenance hours.

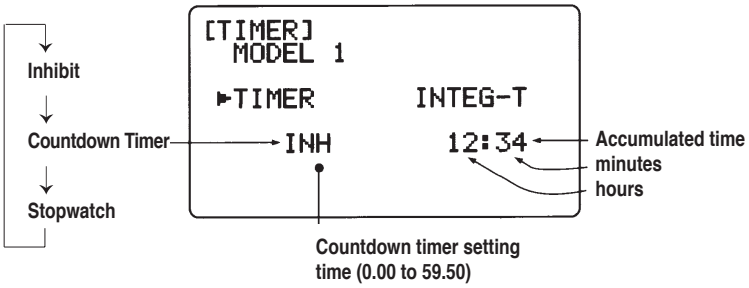

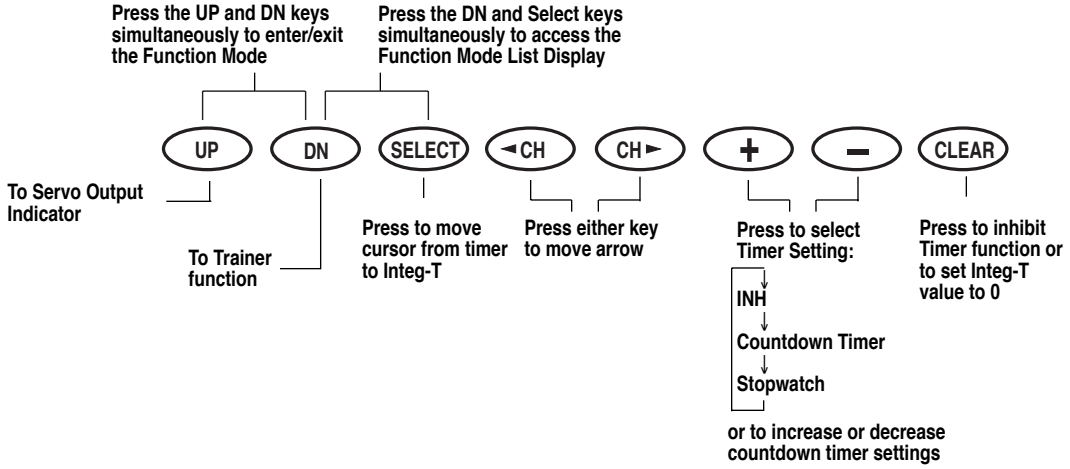

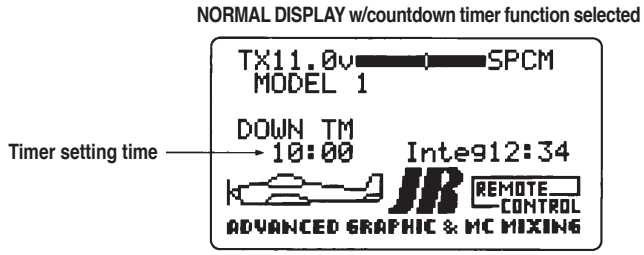

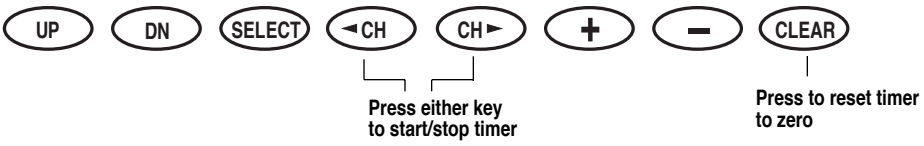

4.17 Servo Output Indicator (Function Mode)

This function displays each servo's operating value. Each bar center indicates neutral position. Left or right dots indicate 50%, 100% and 150%.

Note: All indications are actual positions including adjustments and mixing. It is also possible to view servo travel/ servo directions when mixing functions are activated.

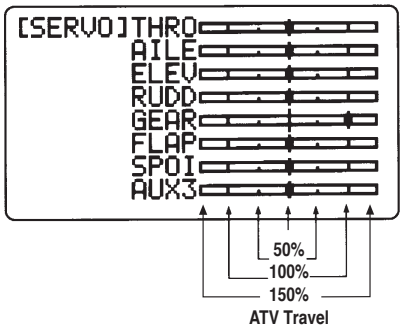

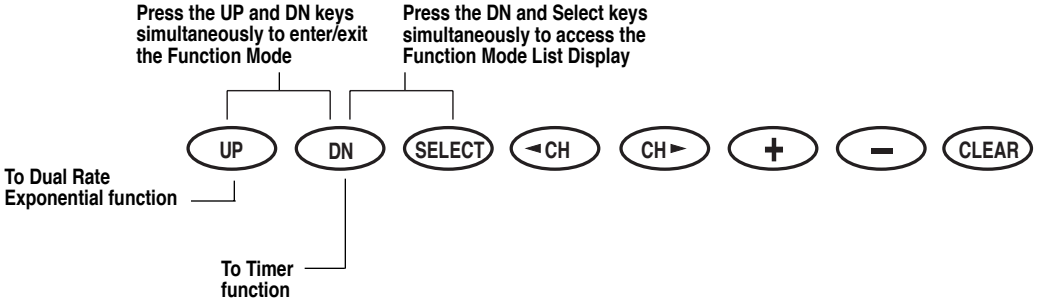

XP8103 DATA SHEET ACRO

MODEL NO. _____

MODEL NAME _____

MODULATION **SPCM · ZPCM · PPM**

	THRO	AILE	ELEV	RUDD	GEAR	FLAP	SPOI	AUX3
REVERSE SW	NORM · REV	NORM · REV	NORM · REV	NORM · REV	NORM · REV	NORM · REV	NORM · REV	NORM · REV
SUB TRIM								
TRAVEL ADJUST	H %	L %	D %	L %	+ %	H %	+ %	+ %
	L %	R %	U %	R %	− %	L %	− %	− %
FAIL-SAFE (SPCM·ZPCM)								

			AILE	ELEV	RUDD
DUAL-RATE · EXP	0	D/R	%	%	%
		EXP	%	%	%
	1	D/R	%	%	%
		EXP	%	%	%
Snap Roll	INH · ACT	R-D	%	%	%
		R-U	%	%	%
		L-D	%	%	%
		L-U	%	%	%
TRIM OFFSET					

DIFFERENTIAL	%

AUTO RUDD D/R	INH · ACT

ELEV→FLAP MIX	DOWN	%
	UP	%

AILE→RUDD MIX	RATE	%
	SW	

Landing	ELEV	
	FLAP	
	SPOI	
	AUTO	INH·ACT
		THRO %

		CHANNEL	SW	EXP	L	1	2	3	H
PROGRAM MIX	MIX1	→		OFF · ON					
	MIX2	→		OFF · ON					
				+POS		−POS		OFFSET	
	MIX3	→		%		%			
	MIX4	→		%		%			
	MIX5	→		%		%			
	MIX6	→		%		%			

FLAP POT TRAVEL	FLAP TRIM % INH FLAP FULL

INPUT SEL (Spoiler)	AUX2 POT. · MIX SW

Wing Type	NORMAL · FLAPERON · DELTA

IV. Helicopter Section

1. Transmitter Controls

1.1 Control Identification and Location

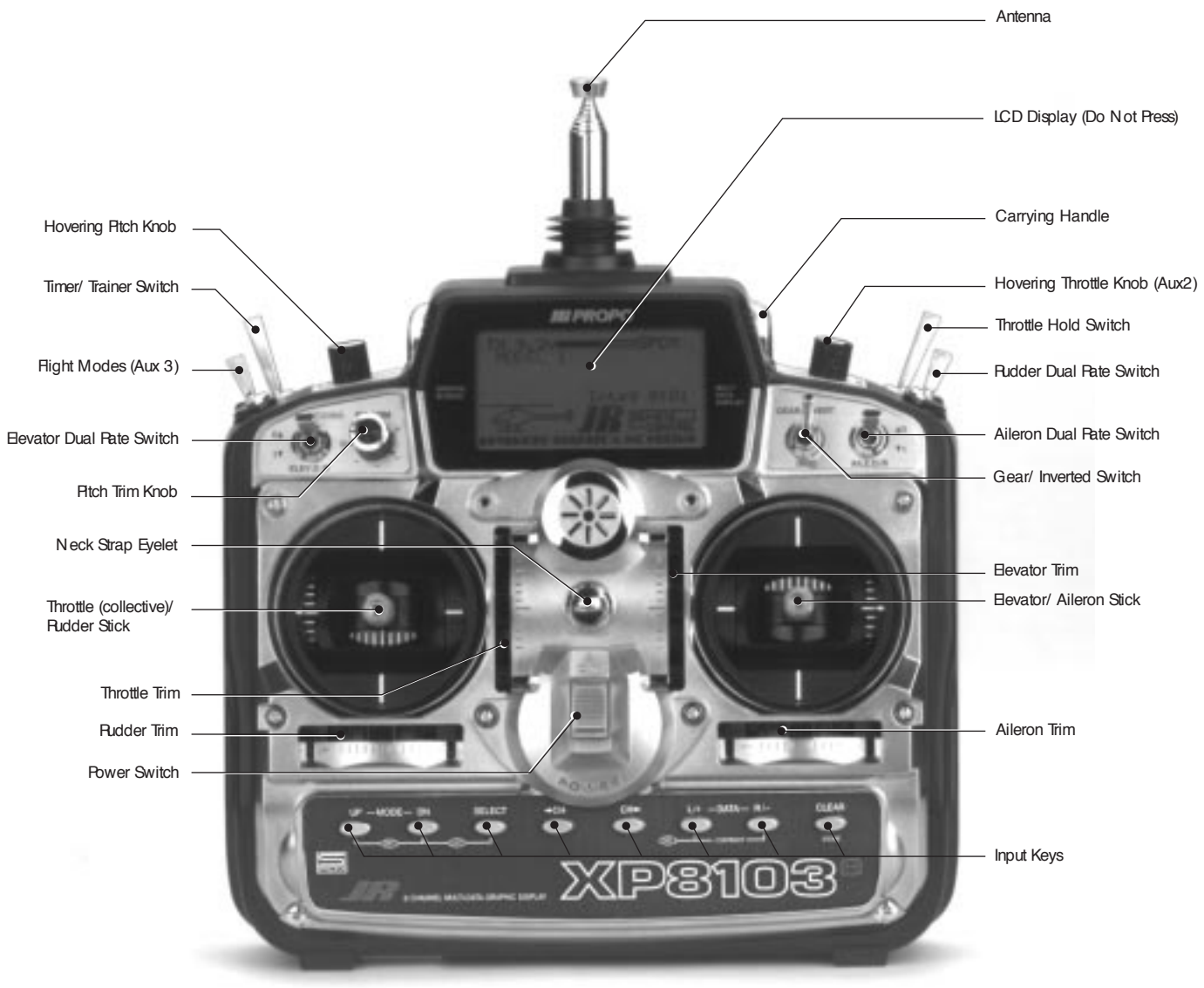

Channel Assignment/Throttle ALT

Channel #	TX Function	Airplane Function
1	Thro	Throttle Channel
2	Aile	Aileron Channel
3	Elev	Elevator Channel
4	Rudd	Rudder Channel
5	Gear	Gear Channel
6	Aux 1	Auxillary 1 Channel (Pitch)
7	Aux 2	Auxillary 2 Channel (Gyro Sensitivity)
8	Aux 3	Auxillary 3 Channel

Throttle ALT

The Throttle ALT function makes the throttle stick trim active only when the throttle stick is at less than half throttle. This gives easy, accurate idle adjustments without affecting the high throttle position.

Helicopter Version Transmitter–Airplane Mode

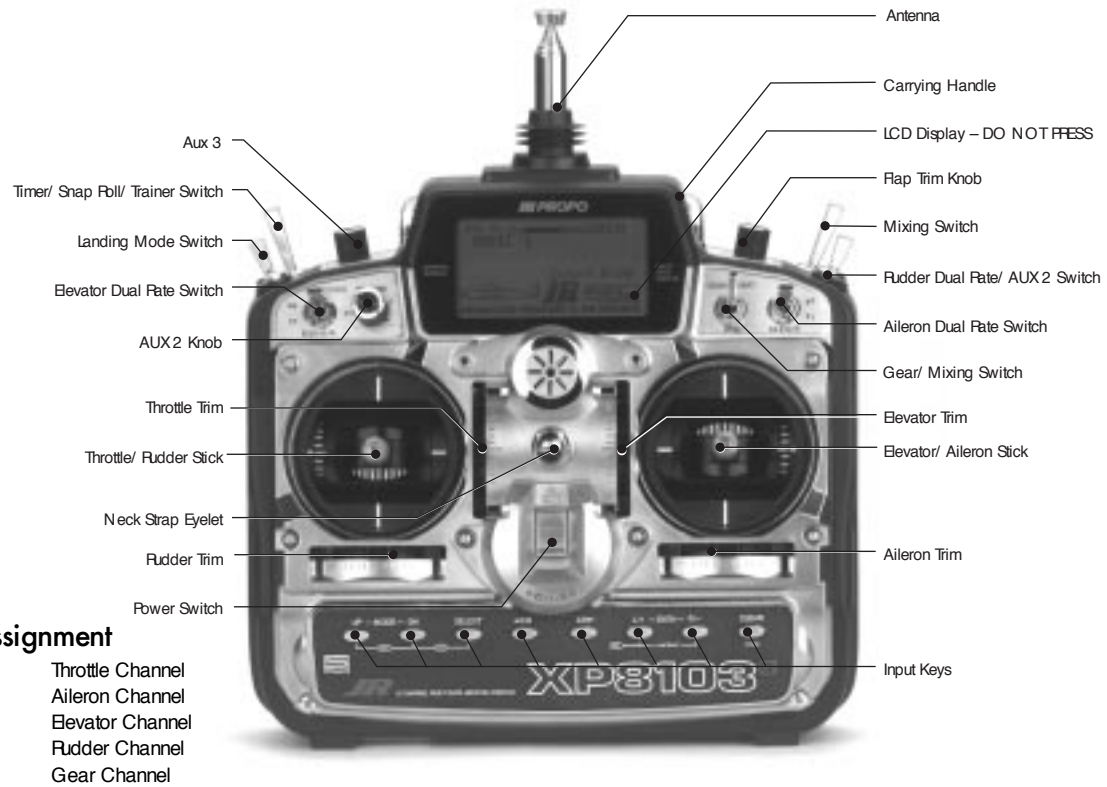

Channel Assignment

1.	THRO	Throttle Channel
2.	AILE	Aileron Channel
3.	ELEV	Elevator Channel
4.	RUDD	Rudder Channel
5.	GEAR	Gear Channel
6.	AUX1	Auxiliary 1 Channel Flap)
7.	AUX 2	Auxiliary 2 Channel (Spoiler)
8.	AUX 3	Auxiliary 3 Channel

Helicopter Version Transmitter–Glider Mode

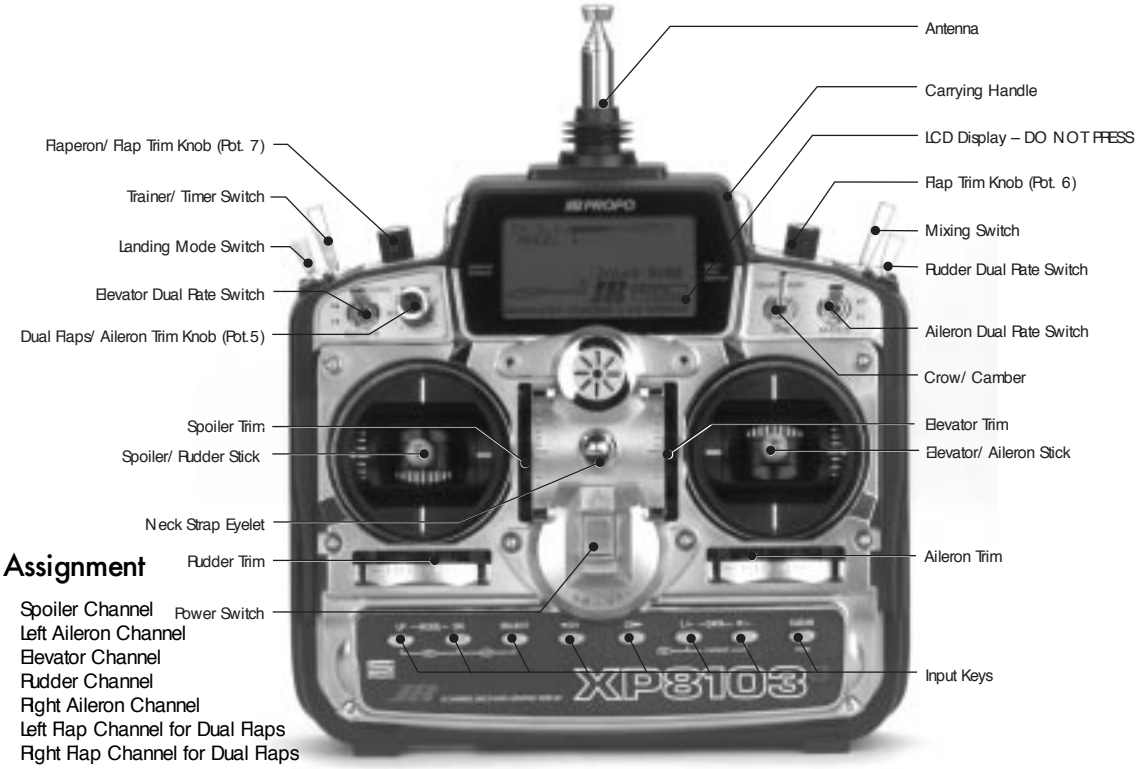

Channel Assignment

1.	SPOI	Spoiler Channel
2.	AIL1	Left Aileron Channel
3.	ELEV	Elevator Channel
4.	RUDD	Rudder Channel
5.	AIL2	Right Aileron Channel
6.	FLAP	Left Flap Channel for Dual Flaps
7.	AUX2	Right Flap Channel for Dual Flaps
8.	AUX3	Auxiliary 3 Channel

1.2 Switch Warning Safety Feature (Helicopter Mode)

When the XP8103 transmitter is operated in the helicopter mode, there is a warning system that is employed to avoid accidental operation when the power switch is initially turned ON.

If all or one of the flight mode switch, inverted switch or throttle hold switch are not in the normal setting, you will hear an alarm sound and see a message displayed on the LCD. When all lever switches are returned to the normal condition, the display will return to normal. **Note:** If the inverted and throttle hold switch functions are not activated prior the power switch being turned ON, no alarm will sound.

Below is the display example of WARNING CONDITION when the power switch is ON:

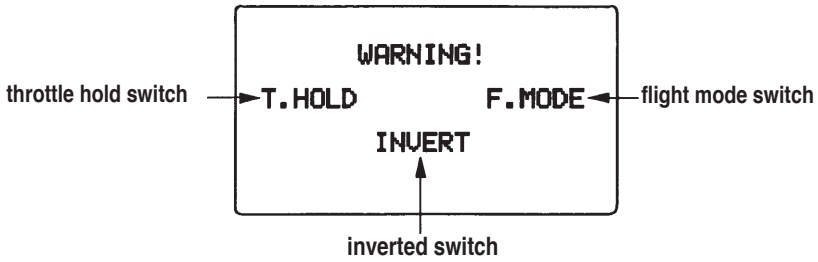

1.3 Connections

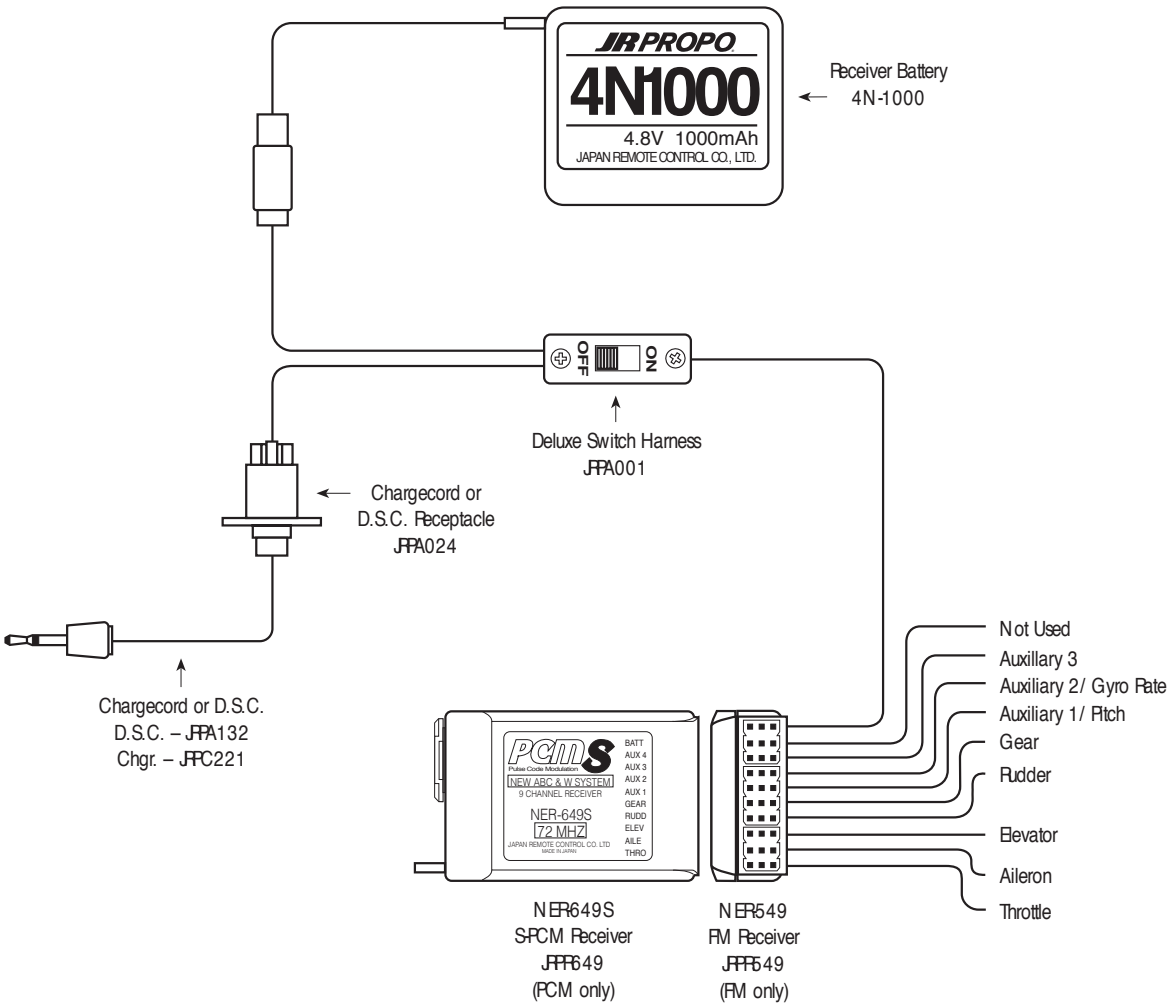

1.4 Gyro Connections

Connect the gyro to the axis to be controlled (commonly rudder channel) per the illustration below.

The gyro unit should be mounted as close as possible to the center of gravity of the helicopter (near the main shaft) at a position where vibration is minimal. Please refer to the specific gyro/ helicopter instructions for proper gyro placement and installation.

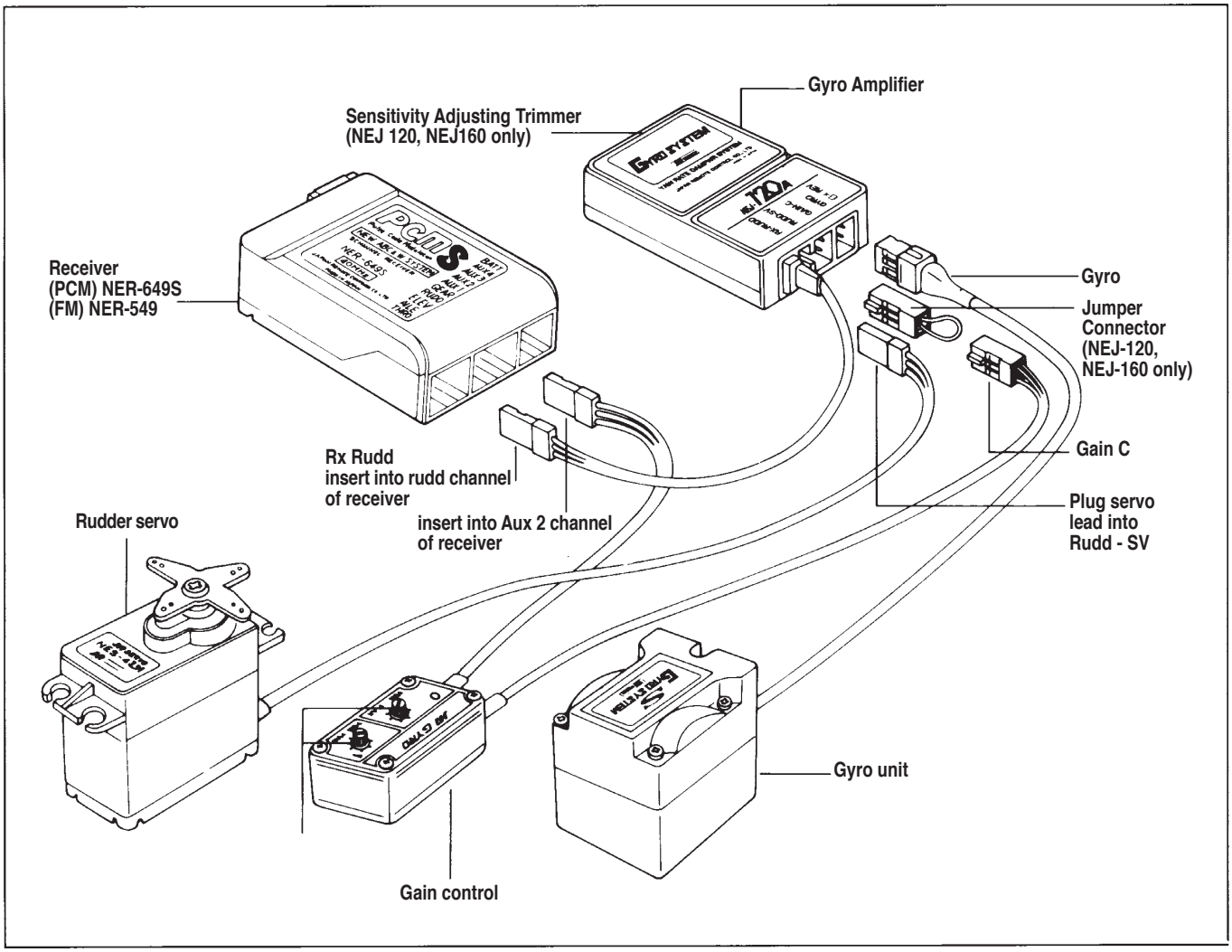

2. General Information

2.1 Input Key Function

• You will hear a clicking (beeping) sound to confirm input has been achieved.

• Except for the CLEAR key, the AUTO advance system, (two speed scrolling) is active when you continue pressing down on a key.

• The SEL keys or CH keys are used to scroll through, or manipulate functions within a specific program or display.

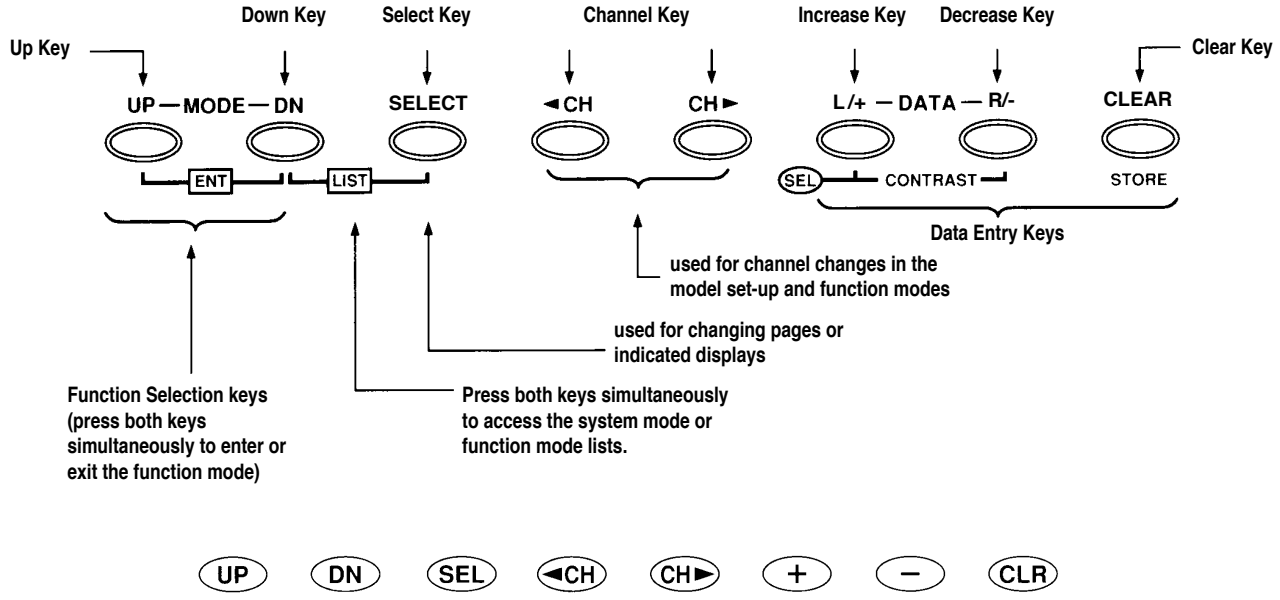

2.2 Normal Display

Normal Display Screen

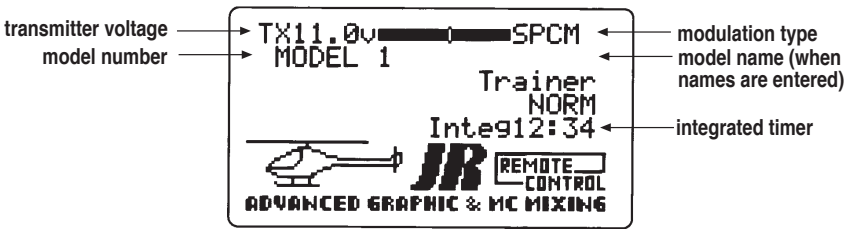

2.2 Normal Display, cont.

From the Normal Display, the following inputs can be made:

When setting various functions with the buttons shown below, start either in the Function Mode or the System Set-Up Mode.

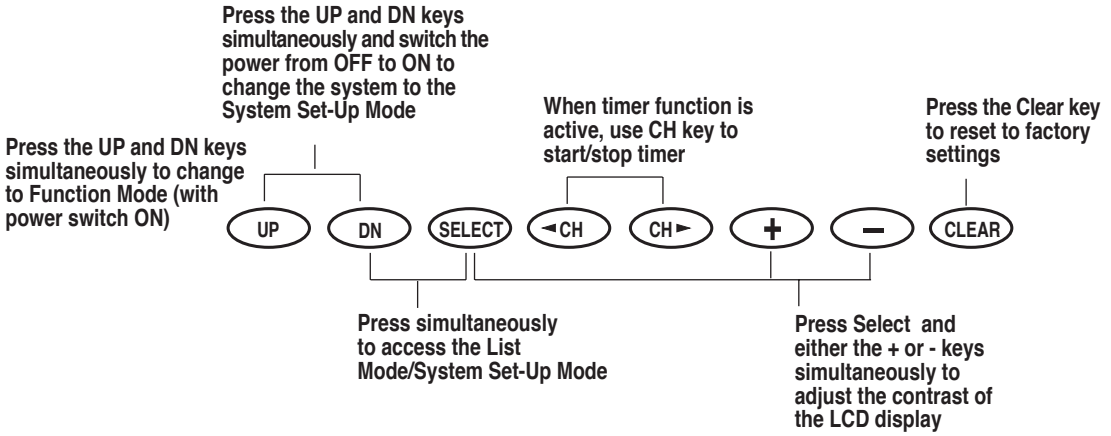

2.3 Aux 3 Function (Channel #8)

The Aux 3 channel (channel #8) is accessible either through an independent switching of the flight mode 3 position switch, or through mixing using Aux 3 (channel #8) as a slave channel (Refer to section 4.14 page 87 of this manual for Programmable Mixing Function).

When used in conjunction with the flight mode switch, Aux 3 (channel #8) is of the non-proportional variety having only a low-mid-high servo travel, with low and high values adjustable through the servo travel adjustment function (section 4.5 page 76).

When used as a mixed slave channel, Aux 3 (channel #8) becomes fully proportional and separate from the flight mode switch. Travel adjustment is then available either through the travel adjust function, or the programmable mixing function.

3. System Set-Up Mode Functions

3.1 System Set-Up Mode

To set the System Set-Up Mode, press the UP and DN keys simultaneously and turn the power switch from OFF to ON. Functions are selectable by pressing either the DN or UP keys. Individual settings are explained later at each function. In this mode, servos are not activated, but operating signals are transmitting (only when the Tx module is in place). However, use extra caution not to interfere with other frequencies. By pressing the DN and UP keys simultaneously, you can return to the normal display, which allows the servos to again operate.

System Set-Up Mode

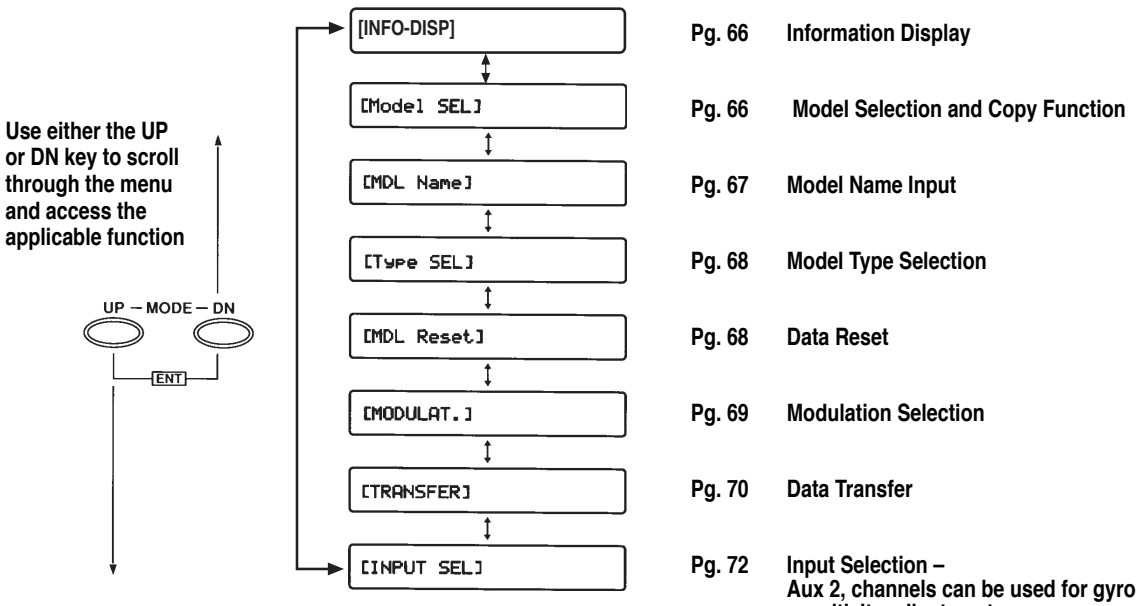

Pg. 66	**Information Display**
Pg. 66	**Model Selection and Copy Function**
Pg. 67	**Model Name Input**
Pg. 68	**Model Type Selection**
Pg. 68	**Data Reset**
Pg. 69	**Modulation Selection**
Pg. 70	**Data Transfer**
Pg. 72	**Input Selection – Aux 2, channels can be used for gyro sensitivity adjustment**

3.2 Function Mode

From Normal Display, press the UP and DN keys simultaneously to enter the Function Mode. In this mode, by using the UP or DN keys, the desired functions can be selected. When channel selection or an additional function change is desired, use the CH keys or Select key. For example, Dual Rate Function is selected and the elevator channel is displayed by pressing the UP key once; the function is changed to the next mode, Reverse Switch, but the channel is still displayed as elevator.

Function Mode Flowchart

Information pertaining to each function is explained on the page number listed next to the function name. Functions will appear on the screen in the same order they are shown on the flow chart below:

Therefore, by scrolling through the program, you can adjust each function related to the elevator channel quickly and easily.

To Access The Function Mode

1. Switch the power switch to the ON (upper) position.
2. Press the UP and DN keys simultaneously.
3. Use either the UP or DN keys to scroll through the menu and access the appropriate function.

Use either the UP or DN key to scroll through the menu and access the applicable function

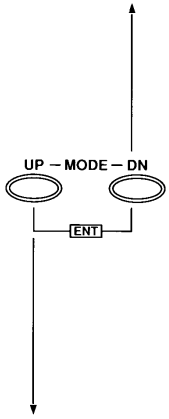

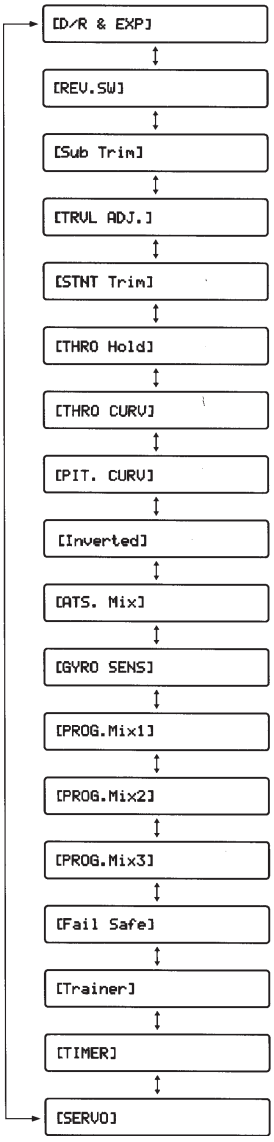

Pg. 73 **Dual Rate Exponential**

Pg. 75 **Reverse Switch**

Pg. 75 **Sub-Trim Adjustment**

Pg. 76 **Servo Travel Adjust (End Point Adjustment)**

Pg. 76 **Stunt Trim**

Pg. 77 **Throttle Hold**

Pg. 78 **Throttle Curve**

Pg. 81 **Pitch Curve**

Pg. 83 **Inverted Flight**

Pg. 84 **Revolution/Acceleration Mixing**

Pg. 85 **Gyro Sensitivity Adjustment**

Pg. 87 **Programmable Mixing 1**

Pg. 87 **Programmable Mixing 2**

Pg. 87 **Programmable Mixing 3**

Pg. 91 **Fail-Safe/Hold (PCM Only)**

Pg. 94 **Trainer**

Pg. 95 **Timer Setting**

Pg. 97 **Servo Output Indicator**

3.3 List Mode

To enter the List Mode, press the DN and SEL keys simultaneously. From this display, pressing the UP and DN keys simultaneously will move the system from the list mode to the function shown at the cursor. Note that the cursor is moved by the UP and DN keys.

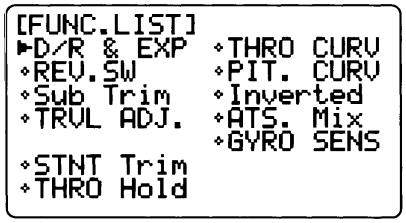

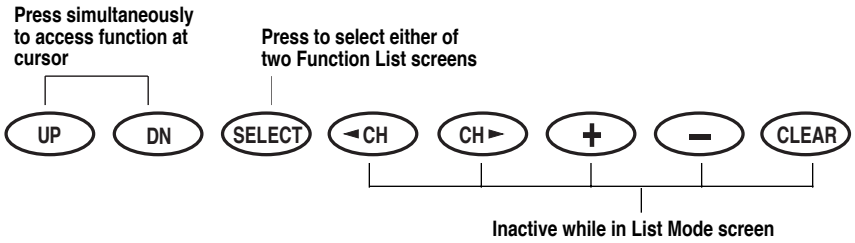

3.4 Model Select (System Set-Up Mode)

The XP8103 transmitter employs a memory function which memorizes data for up to 10 individual aircraft. All settings along with type selection, function, and different aircraft are used by one transmitter. For example, Model 1 is helicopter and Model 2 is airplane. To avoid confusing models, inputing model names for each aircraft is recommended (see page 67). Press the UP and DN keys simultaneously and turn the power switch ON to access the System Set-Up Mode.

The display below shows the model selection function.

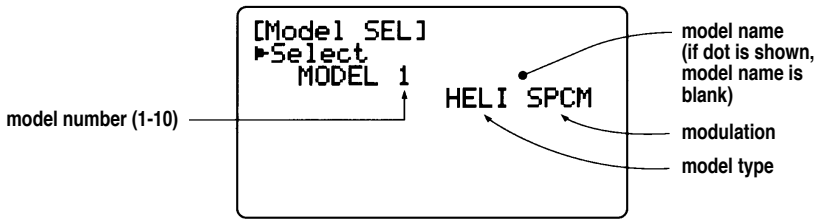

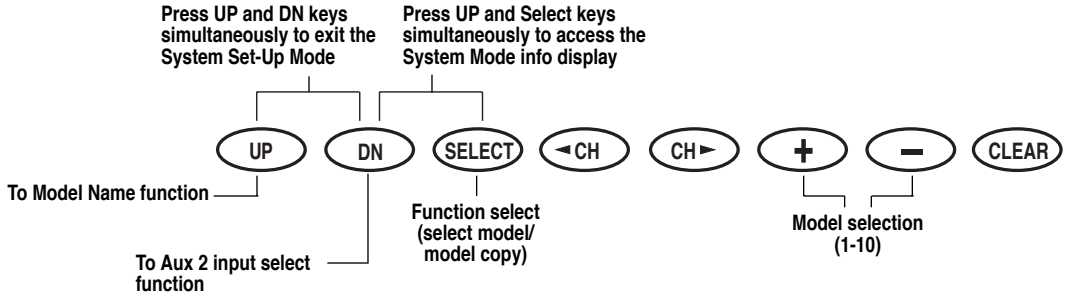

3.5 Copy Select Function (System Set-Up Mode)

The Copy Select Function enables you to copy all of the settings of your current model to another memory (model number) within the same transmitter. This is very useful when setting up one aircraft several different ways.

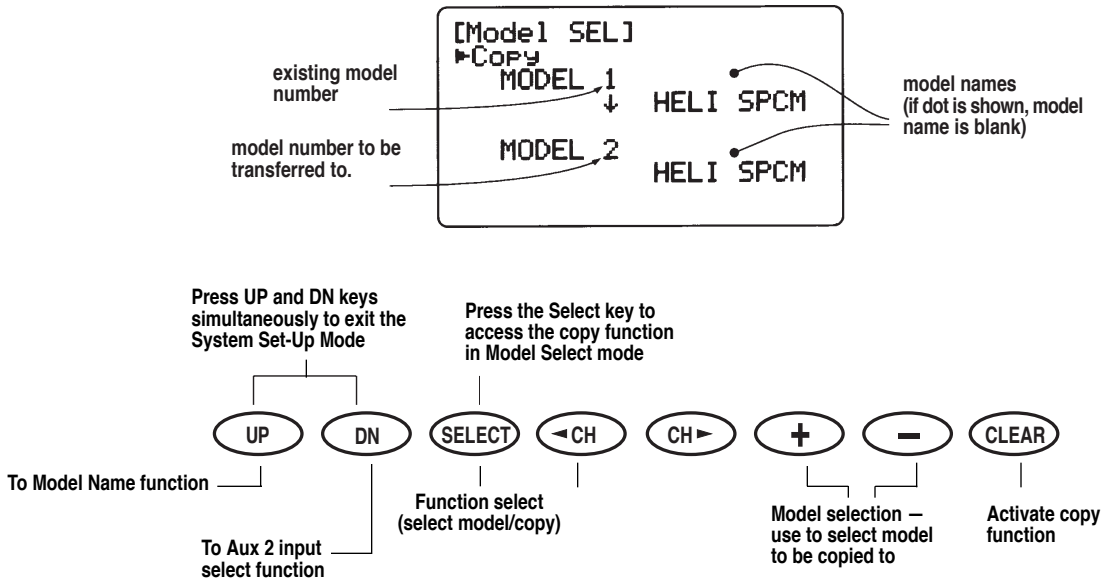

3.6 Model Names (System Set-Up Mode)

This function is used to input model names individually. Each model's name is displayed in the normal screen automatically. when that model is selected. To avoid confusing models, inputing model names is recommended. You can input a maximum of 8 characters for each model name.

In the System Set-Up Mode, select the Model Name Function using the UP or DN key. Once selected, simultaneously press the UP and DN keys to access.

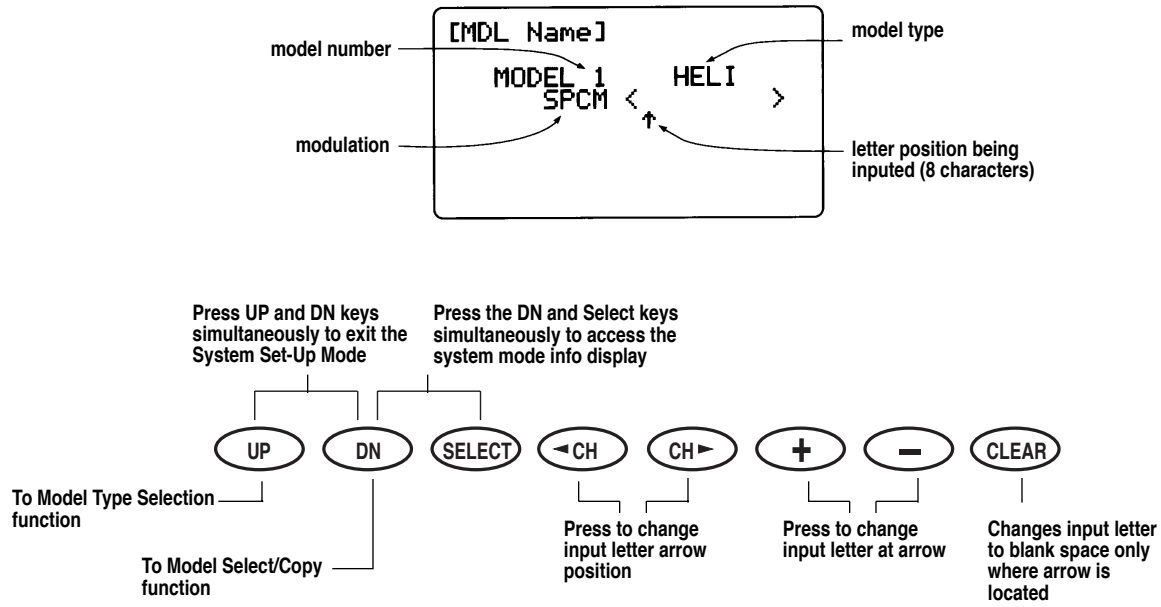

3.7 Model Type Selection (System Set-Up Mode)

The XP8103 is capable of performing as a helicopter, airplane or glider radio with full functions for each.

It can also memorize data for 10 models individually.

Note: If the power switch is turned OFF immediately after selecting the new model type, the change will not be saved. To change and save the model type press the UP or DN keys, or press UP and DN keys or DN and SEL keys simultaneously. At this time, existing model data is replaced by the model type aircraft data selected. Be sure to confirm the model name to prevent accidental loss of your important data. To cancel this function, return to former model type or turn the power switch OFF.

Note: When you select helicopter or glider model type on this transmitter, allocation of lever switches, etc., will also change. Please refer to the helicopter or glider section of this instruction manual for their functions.

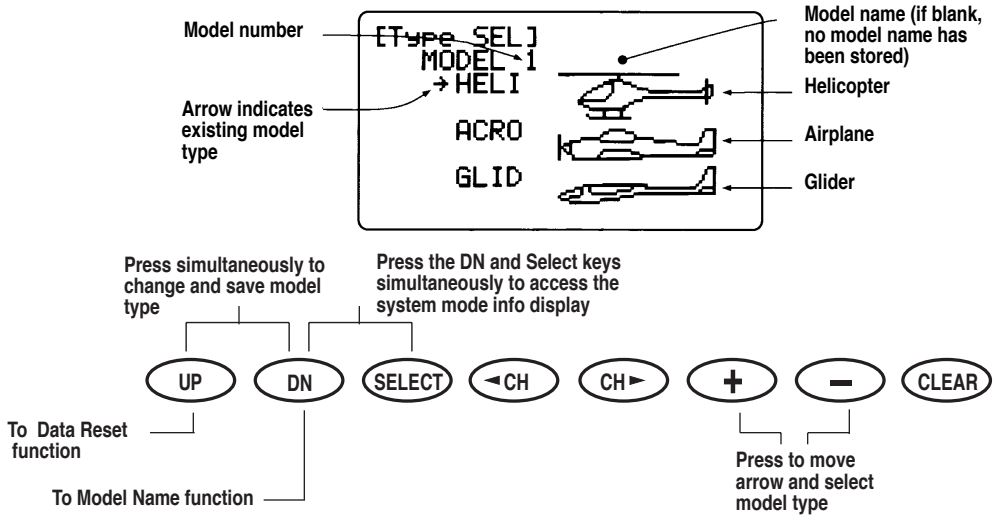

3.8 Data Reset (System Set-Up Mode)

The Data Reset Function allows you to reset all the functions and settings for the current model to the factory pre-set conditions. Resetting does not affect the data already programmed for other models. Be sure to confirm that you need to reset the data of the currently indicated model in order to prevent accidental loss of valuable data.

Note: If a model name has been input and is reset, the model name will not be removed, only the data. Please refer to the Model Name Function for information on how to change the model's name.

To access Data Reset, select Model Reset in System Set-Up and press the UP and DN keys simultanelously.

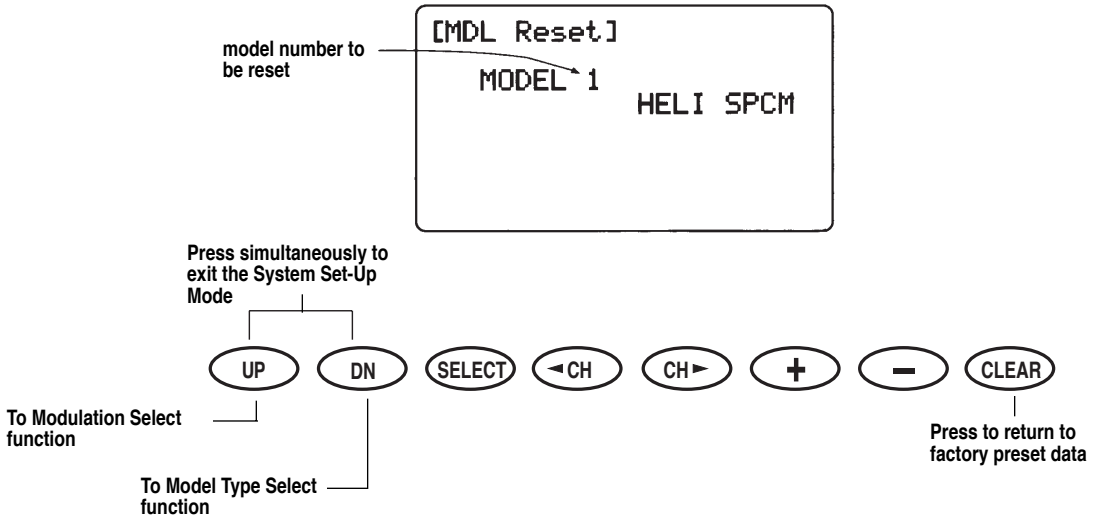

3.9 Modulation Select (System Set-Up Mode)

TThe Modulation Selection Function enables your XP8103 to transmit to a variety of JR receivers that are already, or may soon be, in existence. You can select from either S-PCM or Z-PCM mode, depending on the Central Processing Unit within your receiver, or from PPM (Pulse Position Modulation—FM). Refer to the receiver compatibility chart for the correct modulation.

Caution: After making modulation changes, you must press either the UP and DN, or the DN and SEL keys simultaneously to accept the new modulation type. If the Tx power switch is turned OFF before this procedure, the modulation change will not be saved.

Receiver Compatibility Chart

Tx Modulation	Compatible Receivers	# of Channels & Brief Description
PPM (FM)	NER226	6 (micro)
PPM (FM)	NER228	8
PPM (FM)	NER327x	7
PPM (FM)	NER527x	7 (micro)
PPM (FM)	NER529x	9 (micro)
PPM (FM)	NER549	9
PPM (FM)	NER600	6 (micro)

Tx Modulation	Compatible Receivers	# of Channels & Brief Description
Z-PCM	NER-236	6 (micro)
Z-PCM	NER-627XZ or 627 "G" series	7
Z-PCM	NER-JB29P	9
Z-PCM	NER-910XZ	10
S-PCM	NER-D940S	10
S-PCM	NER-649S	9

In system Set-Up Mode, select Modulation Select using the UP and DN keys and press the UP and DN keys simultaneously to access.

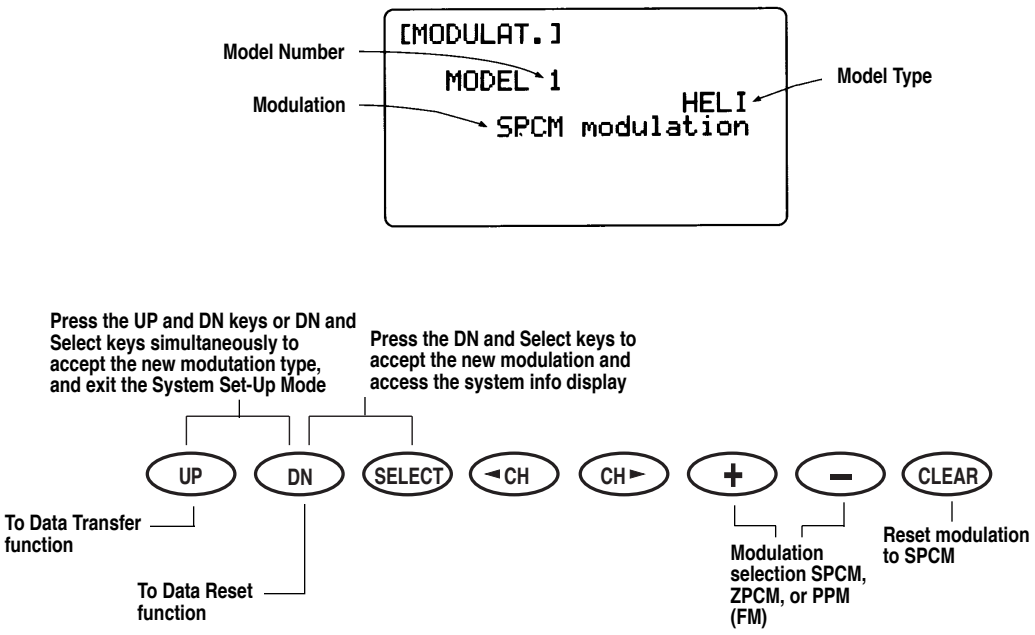

3.10 Data Transfer

This function is used to transfer all existing memorized data for a model from one XP8103 transmitter to another XP8103 transmitter.

Use the + and - keys to select models to be transferred and activate by pressing the CLR key.

To avoid the loss of important data, re-confirm model names when transferring.

Caution: Please use special caution when copy function is activated as existing data is replaced with new data.

Caution: When the battery alarm is activated (battery low), the copy function is not operational.

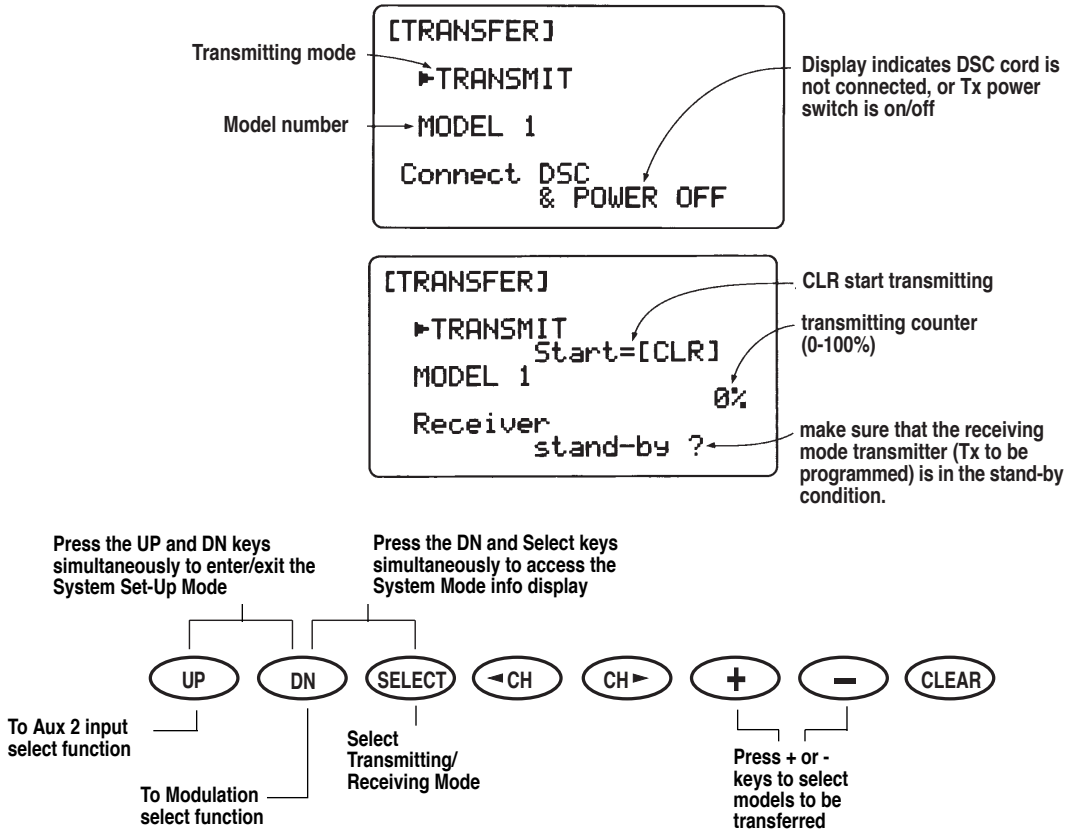

Transfer Procedure

1. Select the model number to be transferred (transmitting mode side) through the model select function. (See page 66 for information on Model Select Function.)

2. Both transmitters: With the power switches OFF, press the UP and DN keys simultaneously while inserting the trainer cord into the DSC jacks of both transmitters.

3. Both transmitters: Select the Transfer Fuction by pressing the UP or DN key. Then simultaneously press the UP and DN keys to enter the Transfer Function.

4. Receiving mode transmitter (Tx to be programmed): Press the Select key until the screen reads "Receive." Select the receiving model number by pressing the + or - keys. Next, press the CLR key to activate the receiving stand-by mode.

5. Transmitting mode transmitter (Tx with program to be transferred): Press the CLR key to start transmitting data. Both transmitters will indicate [End ok!] display when the transmitting is complete.

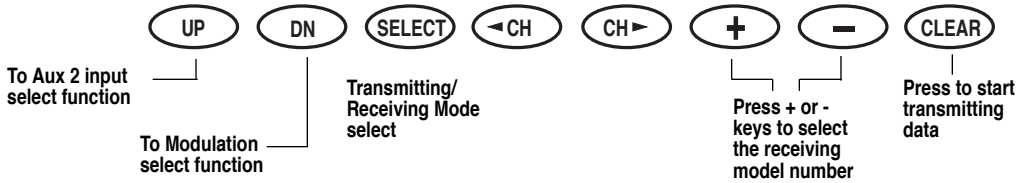

When there is a data receiving failure during transmitting, the counter will stop. At this time, press the CLR key to stop the receiving condition. Check to be sure the receiving counter is operating normally and ended with 100%. If there is any failure of transferring, the display will appear as follows:

ERROR Tx mismatch

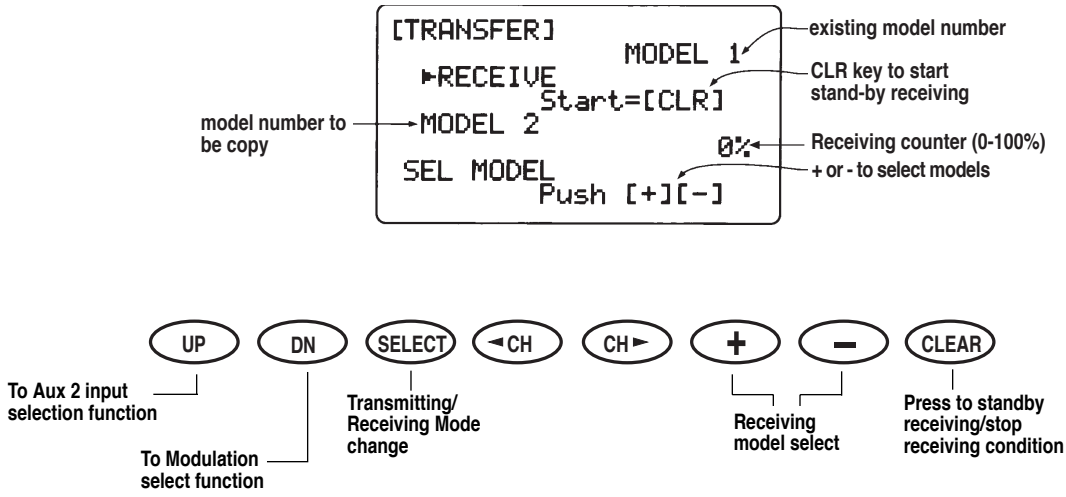

When the receiving counter is stopped or you see ERROR indicated, check the DSC cord connections or trainer cord conditions and try again. When data has been received correctly, you will see [End ok] display. Be sure that the receiving mode transmitter is in stand-by condition first. Then on the transmitting transmitter press the CLR key to start transmitting.

Also ensure that when transferring is complete, previous data stored in the receiving side transmitter is covered by new data transferred.

Note: This function does not work when the battery alarm is flashing.

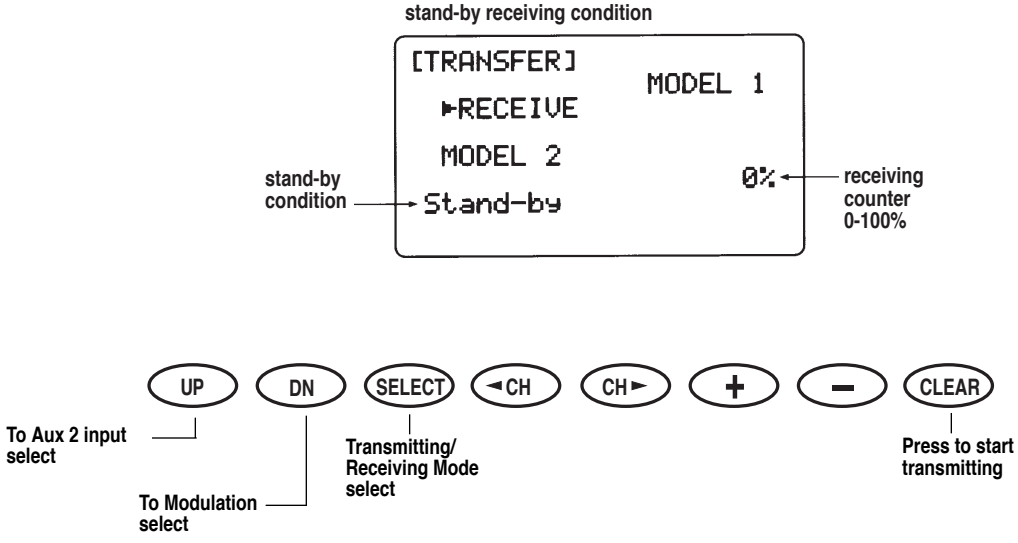

Aux 2 (Channel #7) Input Selection

The Aux 2 Channel Input Selection Function allows you to select which switch, pitch trim knob, or throttle hold switch will activate the Aux 2 Function. If you are using the Aux 2 Function (channel #7) for remote gyro sensitivity, JR TEC-1000 carburetor operation, etc., this function should remain in the factory INH position.

When using the Aux 2 Function for the gyro sensitivity, you can change the rudder dual rate and the gyro sensitivity at the same time. Conversely, if the throttle hold switch is selected, the gyro sensitivity is changed only when the throttle hold is activated.

Press the UP and DN keys simultaneously and turn the power switch ON to access the system Set-Up Mode. Using the UP and DN keys, select Input Select Function and press the UP and DN keys simultaneously to access.

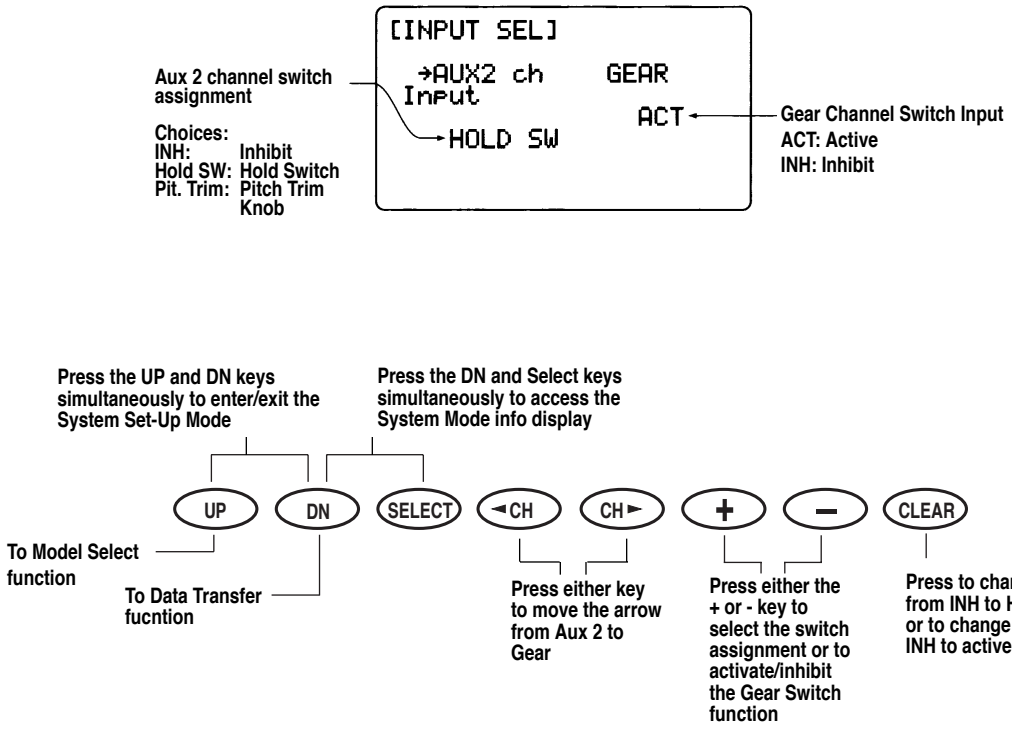

4. Function Mode Functions

4.1 Dual Rate, Exponential (Function Mode)

Dual rates are available for the aileron, elevator and rudder channels of your R/C helicopter. The amount of travel is adjustable from 0-125%; exponential is adjustable from 0% (LIN) to 100% in 1% increments. The factory setting, or default value, for both the 0 and 1 switch positions is 100%. Either switch position may be selected as the low or high rate by placing the switch in the desired position and adjusting the value accordingly. There is also an automatic dual rate setting for all three channels, operable from the Flight Mode Switch.

Dual rates can be defined as the ability to vary the travel or throw rate of a servo from a switch. Due to differing travel rates, you will find that the sensitivity of the control either increases or decreases accordingly. A higher rate, or travel, yields a higher overall sensitivity. You may find it easier to think of the Dual Rate Function as double-rated or half-rates.

The Dual Rate Function works in conjunction with the Exponential Function to allow you to precisely tailor your control throws.

In Function Mode, use the UP or DN key to select Dual Rate and access by pressing the UP and DN keys simultaneously.

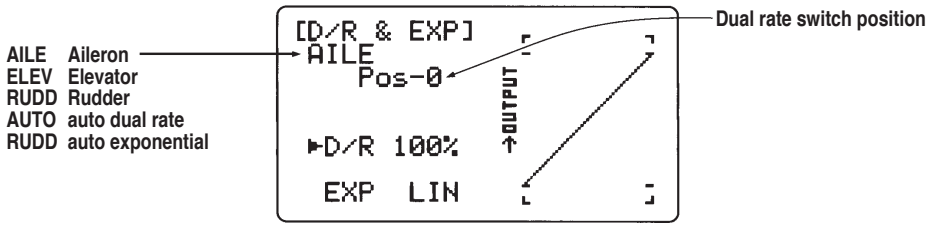

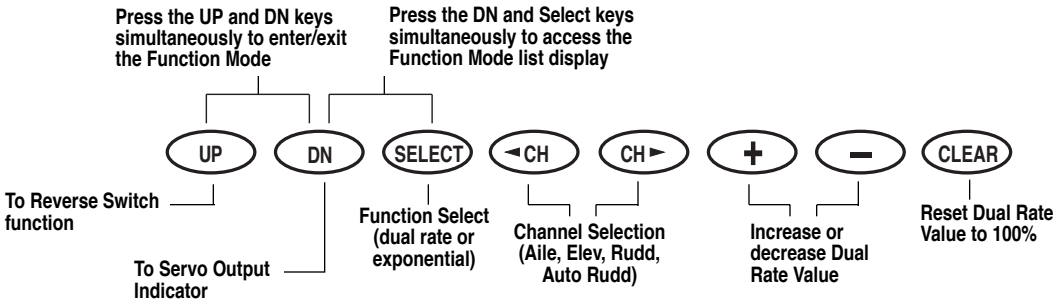

4.2 Automatic Dual Rate, Exponential (Function Mode)

When the Automatic Dual Rate function is activated (ACT), when switching the Flight Mode switch to Stunt 1 or Stunt 2, or when switching the throttle hold switch ON, the Aileron, Elevator, and Rudder channel dual rate values can be switched to the values set for dual rate position #1. Once the Automatic Dual Rate function is selected for a flight mode (1, 2, and/ or hold), AUTO will appear on the D/ R screen when the flight mode switch is moved to the selected position.

Once the Automatic Dual Rate Function has been activated, the word AUTO will appear on the rudder DR/ EXP screen.

Automatic Rudder Dual Rate Setting

Typical dual rate settings are as follows:

Dual Rate Switch Position

0 Position (reduced servo travel, for hovering)

1 Position (maximum servo travel, for aerobatics)

Example: 0 position value is set to 80%; 1 position value is set to 100%.

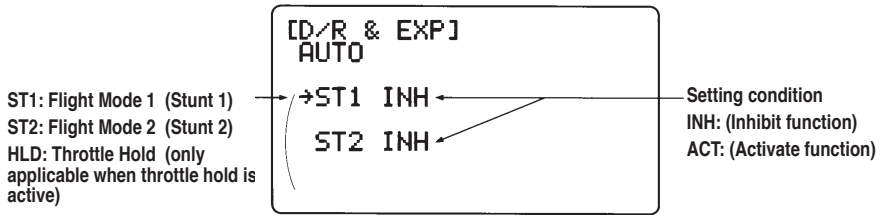

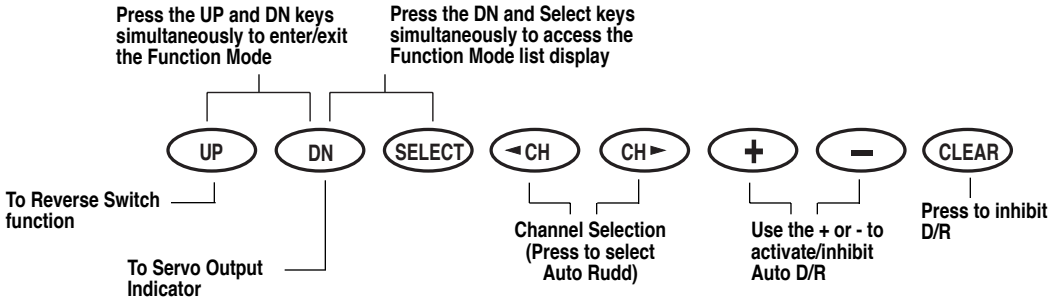

4.3 Reverse Switch (Function Mode)

The Reverse switch is an electronic means of reversing the throw (direction) of a given channel (servo). All eight channels of the XP8103 offer reversible servo direction. This will ease set-up during servo installation in your aircraft.

In Function Mode, use the UP or DN key to select the Reverse Switch function and access by pressing the UP and DN keys simultaneously.

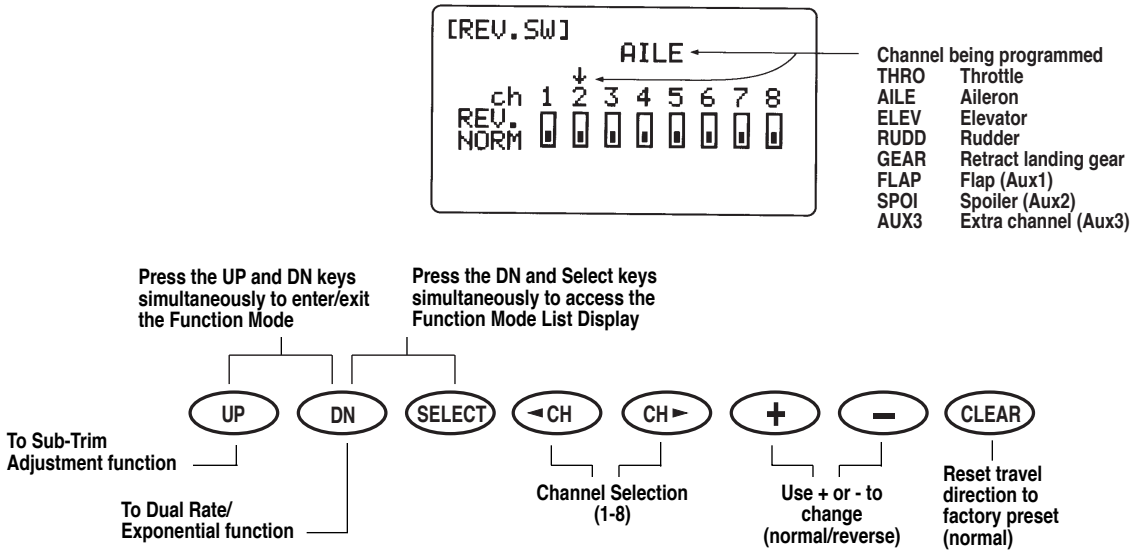

4.4 Sub-Trim Adjustment (Function Mode)

The Sub-Trim Adjustment Function allows you to electronically fine tune the centering of your servos. Individually adjustable for all eight channels, with a range of + or - 125% (+ or - 30 degrees servo travel).

Caution: Do not use excessive sub-trim adjustments as it is possible to overrun your servo's maximum travel.

In Function Mode, use the UP or DN key to select the Reverse Switch function and access by pressing the UP and DN key simultaneously.

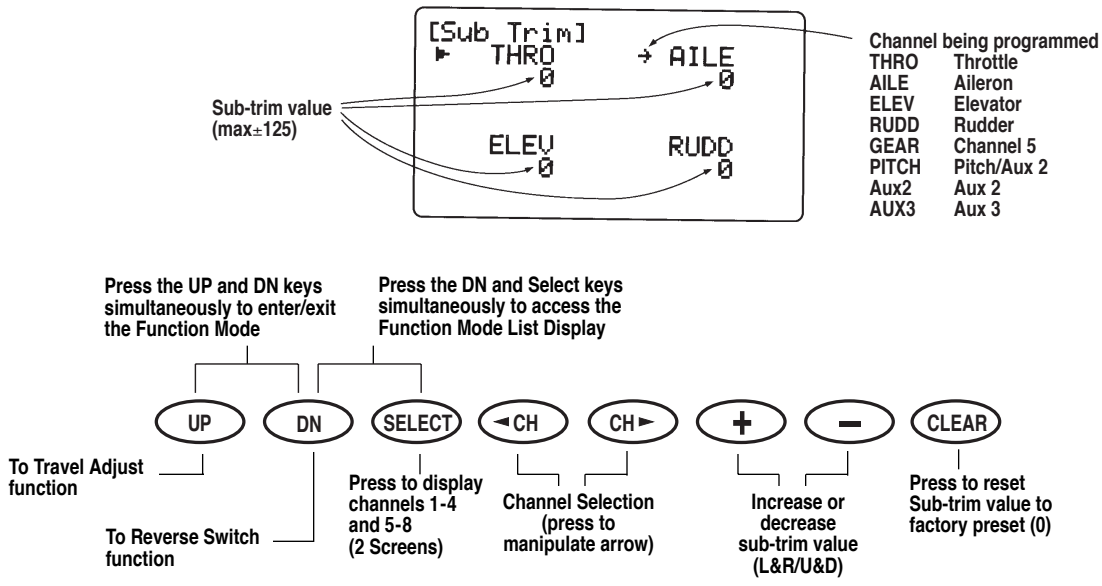

4.5 Travel Adjust (Function Mode)

The purpose of Travel Adjust, also known as endpoint adjustment or adjustable travel volume, is to offer you precise servo control deflection in either direction of servo operation. The travel adjust range is from 0-150% (0 degrees to 60 degrees) from neutral and it can be adjusted for each direction individually. The factory default (data reset) value is 100% for each direction of servo travel.

In the Function Mode, use the UP or DN key to select the Travel Adjust function and access by pressing the UP and DN keys simultaneously.

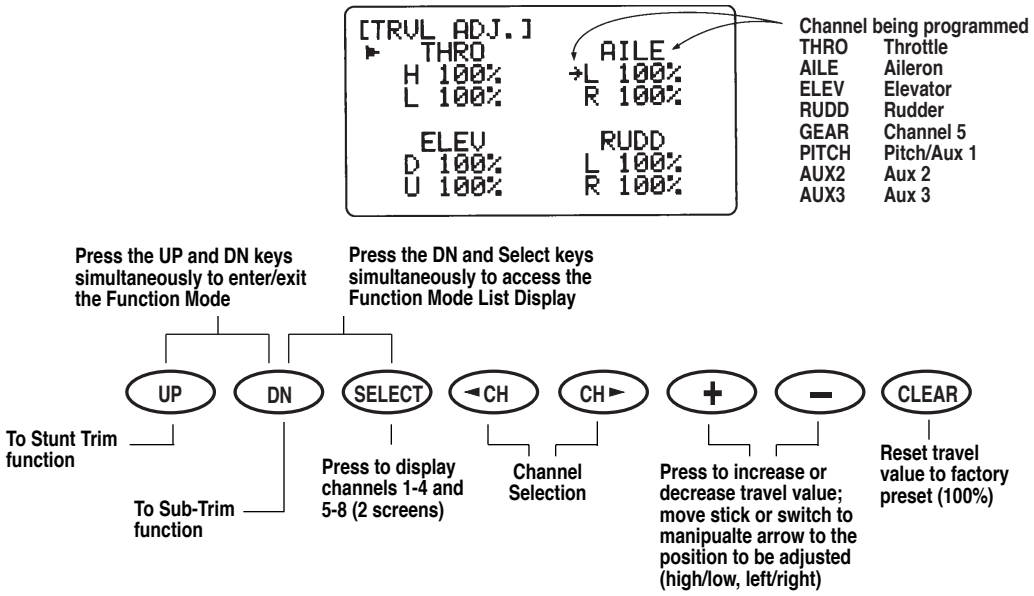

4.6 Stunt Trim (Function Mode)

The Stunt Trim Function is a trim position setting for aileron, elevator and rudder for use during forward flight maneuvers. This function is activated when in the flight modes 1 and 2.

Note: When this function is activated, the trim levers of the aileron, elevator and rudder are inactive. Maximum adjustment range is approximately 30 degrees.

To adjust the stunt trim, fly your helicopter in a straight line at full throttle/ pitch in flight mode 1 or 2. Center the elevator stick. Note which direction the helicopter pitches. If the helicopter pitches up, land the model and add down stunt trim. Repeat until no pitching occurs.

Next, check the rudder. Add rudder stunt trim until the tail tracks directly behind the helicopter. Finally, adjust the aileron stunt trim in the same manner until no rolling occurs. When properly adjusted, your helicopter will fly straight and level at full speed with no correction or trim required.

In Function Mode, use the UP and DN keys to select Stunt Trim and access by pressing the UP and DN keys simultaneously.

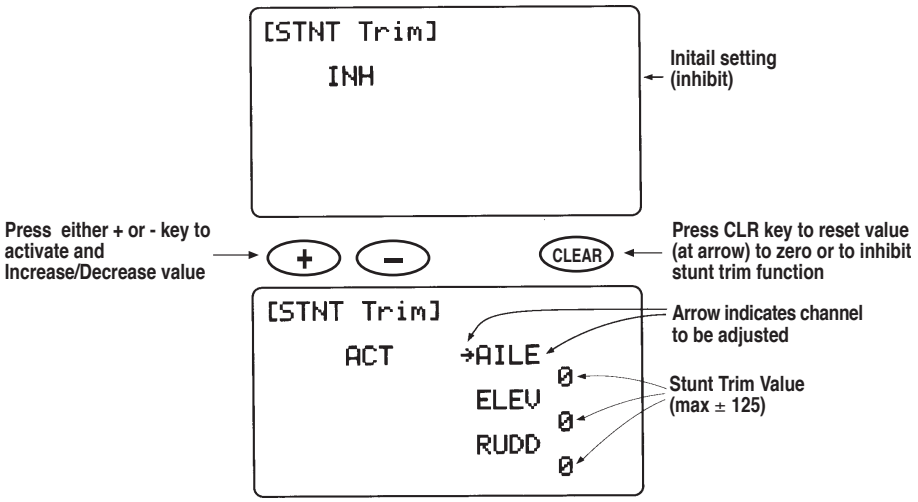

4.6 Stunt Trim (Function Mode), cont.

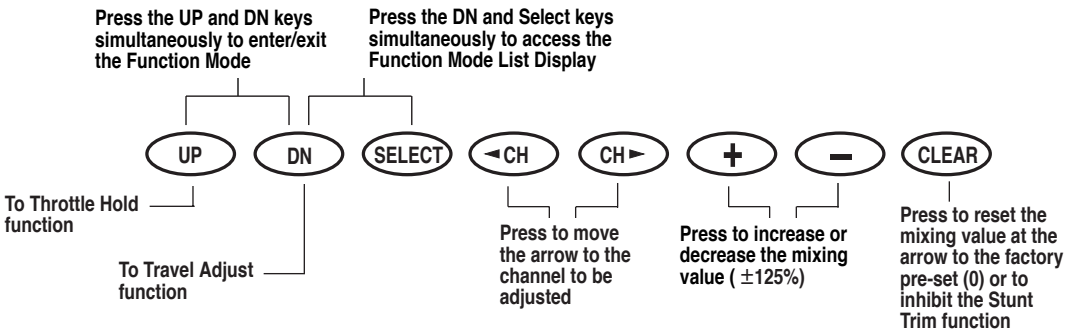

4.7 Throttle Hold (Function Mode)

The Throttle Hold Function holds the throttle servo in a specific position when the switch is activated. This is very useful for practicing autorotation landings. The throttle hold switch is located on the top right corner of the transmitter. The throttle hold function is ON in the forward switch position; in the rear position, the throttle hold function is OFF.

The factory setting for the throttle hold is inhibited. Pressing either the + or - key will adjust the throttle hold value.

Using the + or - key, adjust the throttle hold value to deliver the proper engine RPM for your helicopter. The adjustable range is -20 through +50%. To shut the engine off during an autorotation, a negative value may have to be input.

In Function Mode, use the UP and DN keys to select Thottle Hold and access by pressing the UP and DN keys simultaneously.

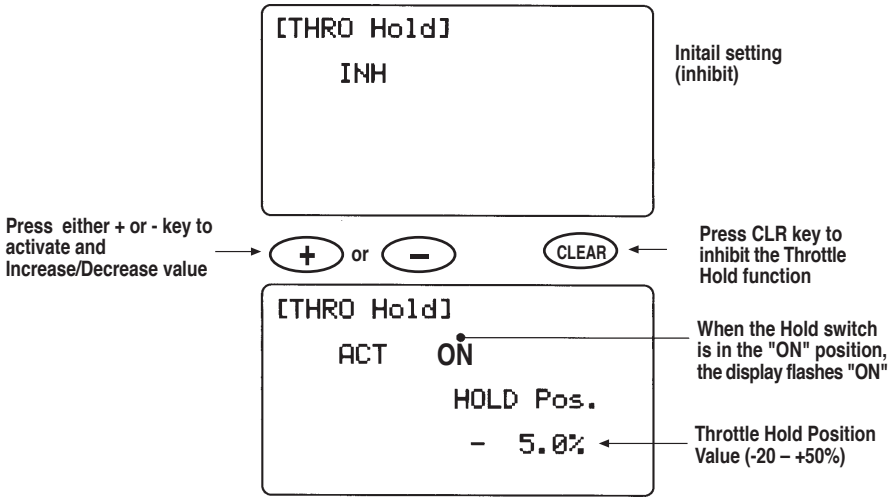

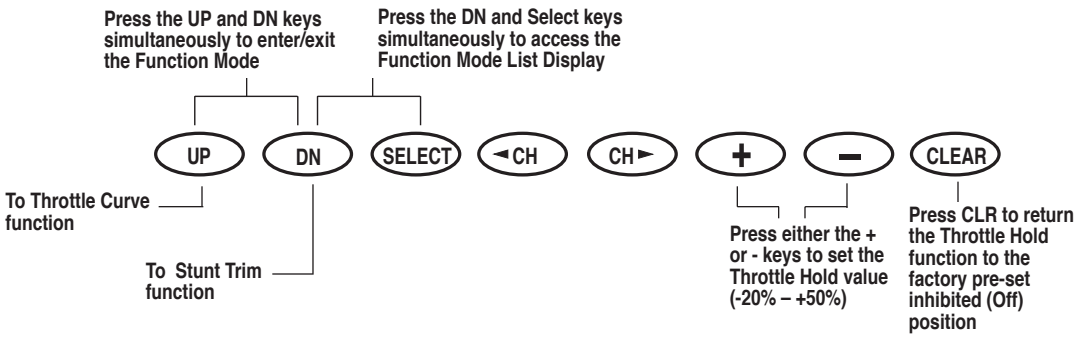

4.8 Throttle Curve (Function Mode)

The XP8103 offers three (3) separate throttle curves with five (5) adjustable points per curve. This function allows you to customize the throttle curve and pitch curve together to maximize engine performance at a particular pitch setting. Once the throttle curves are established, each can be activated in flight using the three (3) position flight mode switch. The flight switch offers three (3) selectable curves. N=Normal, 1=Stunt 1, 2=Stunt 2

The N, or Normal, position should be used for hovering. Positions 1 and 2, or Stunt 1 and Stunt 2, should be used for aerobatic maneuvers and forward flight.

Note: The throttle trim and hovering throttle knobs are only operable when the flight mode switch is in the Normal position. Thus, in the 1 or 2 positions, these two functions have no effect.

Each of the five (5) positions of the throttle curve are independently adjustable from 0-100%. These five (5) positions correspond to the position of the throttle stick.

The transmitter is factory preset to the throttle curve as indicated by the solid line in the figure below. Individual middle points can be activated and increased/ decreased to suit your specific needs.

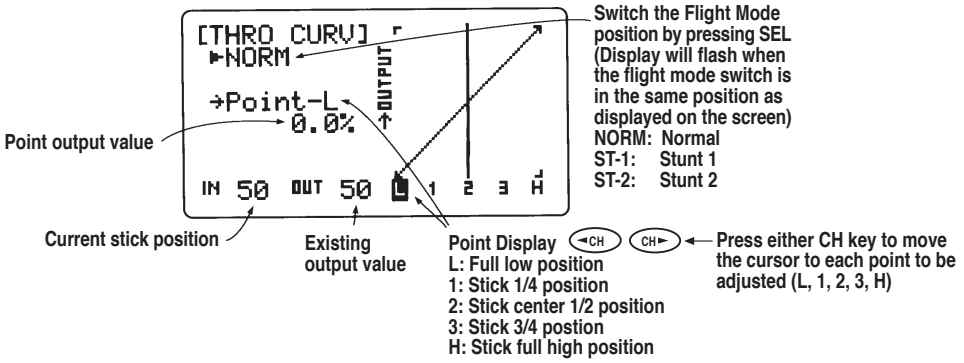

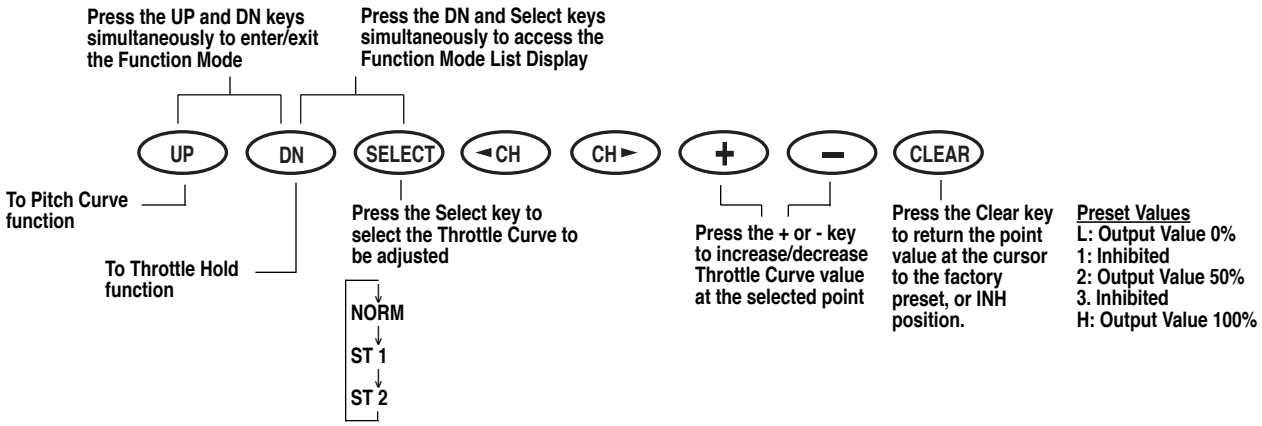

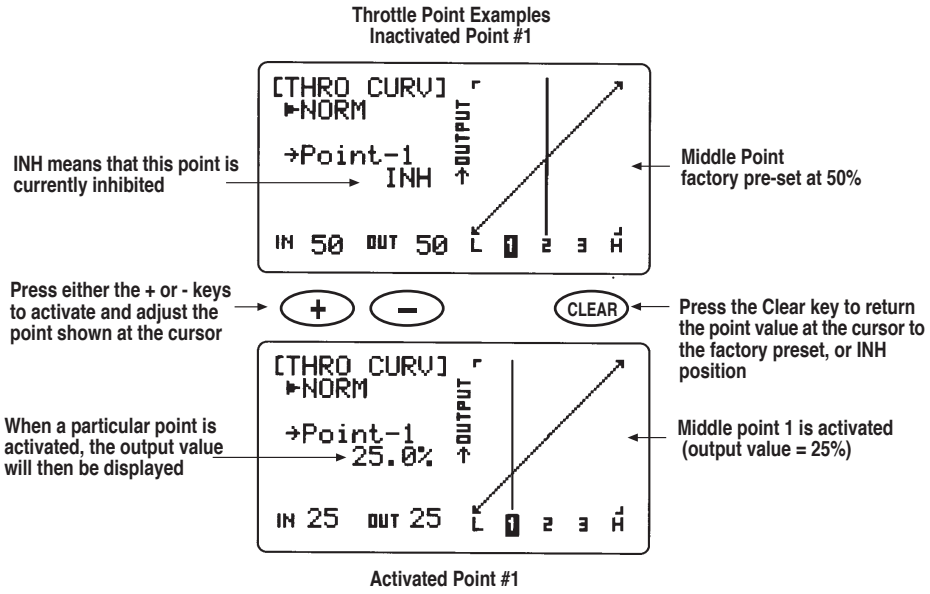

Throttle Trim Setting

The throttle trim lever is only active when the flight mode switch is in the normal position. The throttle trim is used to increase or decrease the engine RPM to achieve a reliable idle when in the Normal Mode. The throttle trim lever has no effect at position 1, 2, Stunt 1 or Stunt 2, or throttle hold.

Hovering Throttle Knob Setting

The hovering throttle knob increases or decreases the engine output power for either the center point only (point #2), or middle three (3) points, if activated, of the throttle curve. As shown in the figures below, use of the hovering throttle knob shifts the middle curve upward or downward. Therefore, operation of the hovering throttle knob does not cause any change to the high point and low point of the throttle curve.

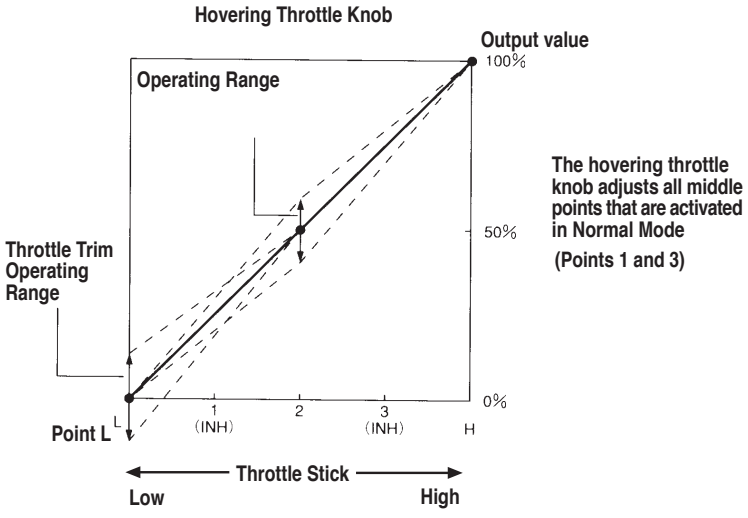

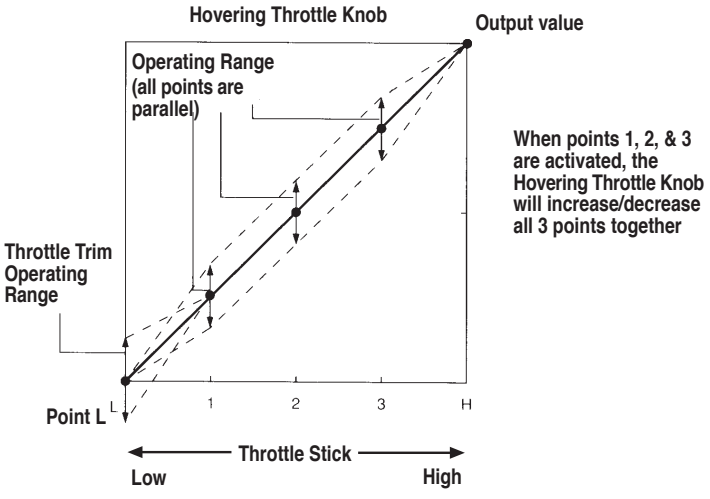

Exponential Throttle Curve Function

With the XP8103 system, individual throttle curves are selectable to be either straight (linear) or curved (exponential). To select an exponential curve, press either of the CH keys until EXP OFF appears on the throttle curve screen. Next press either the + or - key to activate the exponential feature (an "on" will replace the "off" on the screen). With the exponential function ON, you will notice that any "sharp" angles of the throttle curve will become more "rounded" or "smooth," creating a more equal throttle servo movement during the entire throttle curve range.

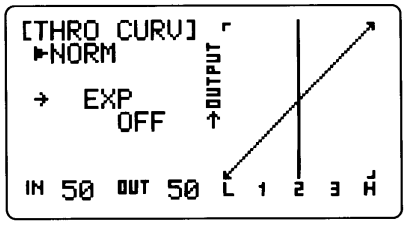

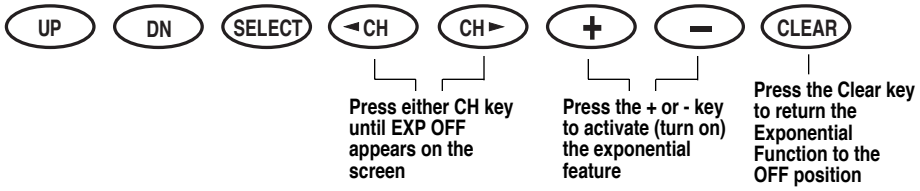

Idle Up

Normally, flight mode 1 and 2 are used to increase engine RPM below half stick for forward flight maneuvers (idle up), and at this time any other trims are not active as the throttle will only operate/ follow the current throttle curve values.

Adjustment of the pitch curve is very similar to the throttle curve adjustment described in the preceding section. A thorough understanding of the throttle curve section will make pitch curve adjustment easier to understand.

The XP8103 offers four (4) independent types of pitch curves: Normal, Stunt 1, Stunt 2 and Hold. Each pitch curve contains five (5) adjustable points — L, 1, 2, 3, and H. **Note:** When setting pitch curve for throttle hold, it is necessary for the throttle hold to be active — if this function is inhibited, the throttle hold pitch curve will not be visible on the screen.

In the Function Mode, use the UP and DN keys to select Pitch Curve and access by pressing the UP and DN keys simultaneously.

Hovering Pitch Knob

The hovering pitch knob operates in the same manner as the hovering throttle knob. It is operable while the flight mode is in the N, or Normal, position, and its function is to shift either the center point only (#2) or the middle three (3) points (if activated) of the curve either upward or downward to adjust rotor RPM at the hover position.

Pitch Trim Knob

The pitch trim knob is a trimmer for the pitch channel. This knob should be set to 0, and all changes upward or downward should be made from this neutral point. This function is used to adjust the main rotor speed (RPM) to stay within manufacturer's specifications. If the pitch curve is set properly, only small trim adjustments will be required.

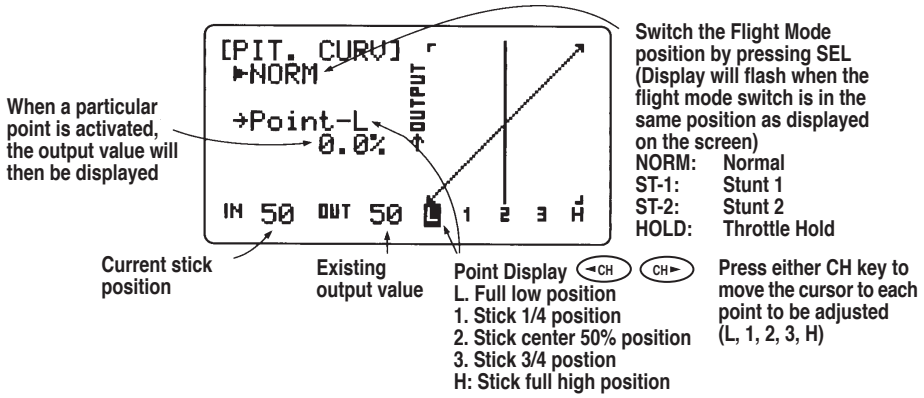

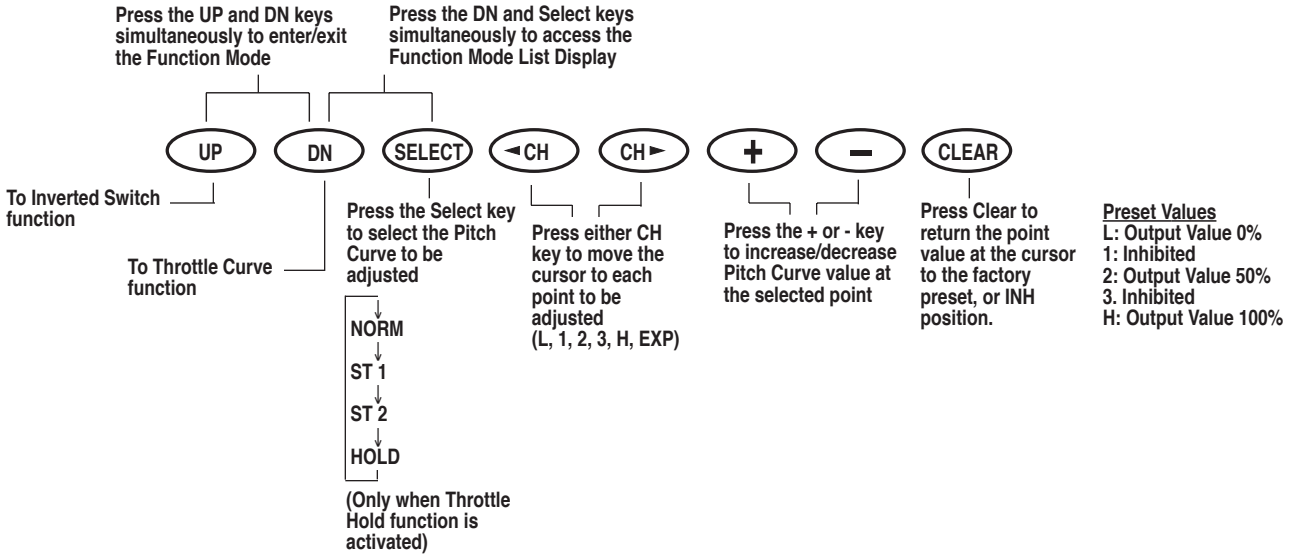

Example of Throttle Curve and Pitch Curve Settings

An example of throttle curve and pitch curve settings for aerobatic specifications are shown below in the form of graphs.

Details of the curves will differ, depending on the helicopter specifications. In these examples, the throttle open-close stroke and autorotation pitch stroke are set from 0 to 100.

Normal Mode/Hover Throttle/Pitch Curve Examples

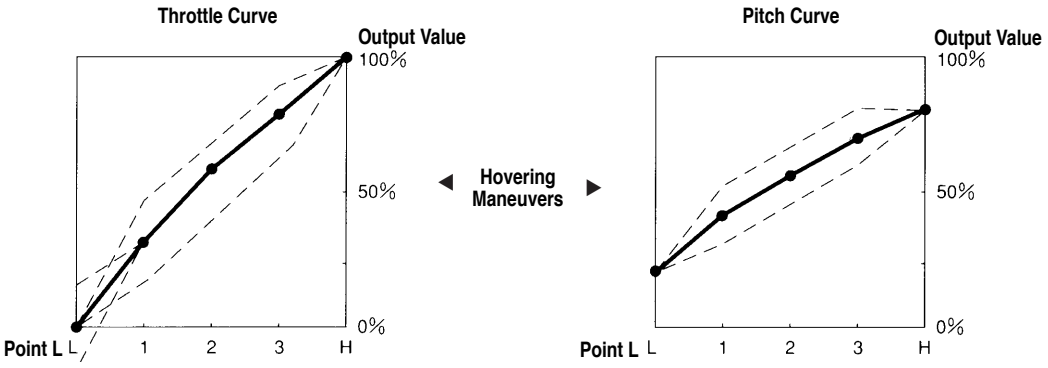

Stunt Mode/Aerobatic Throttle/Pitch Curve Examples

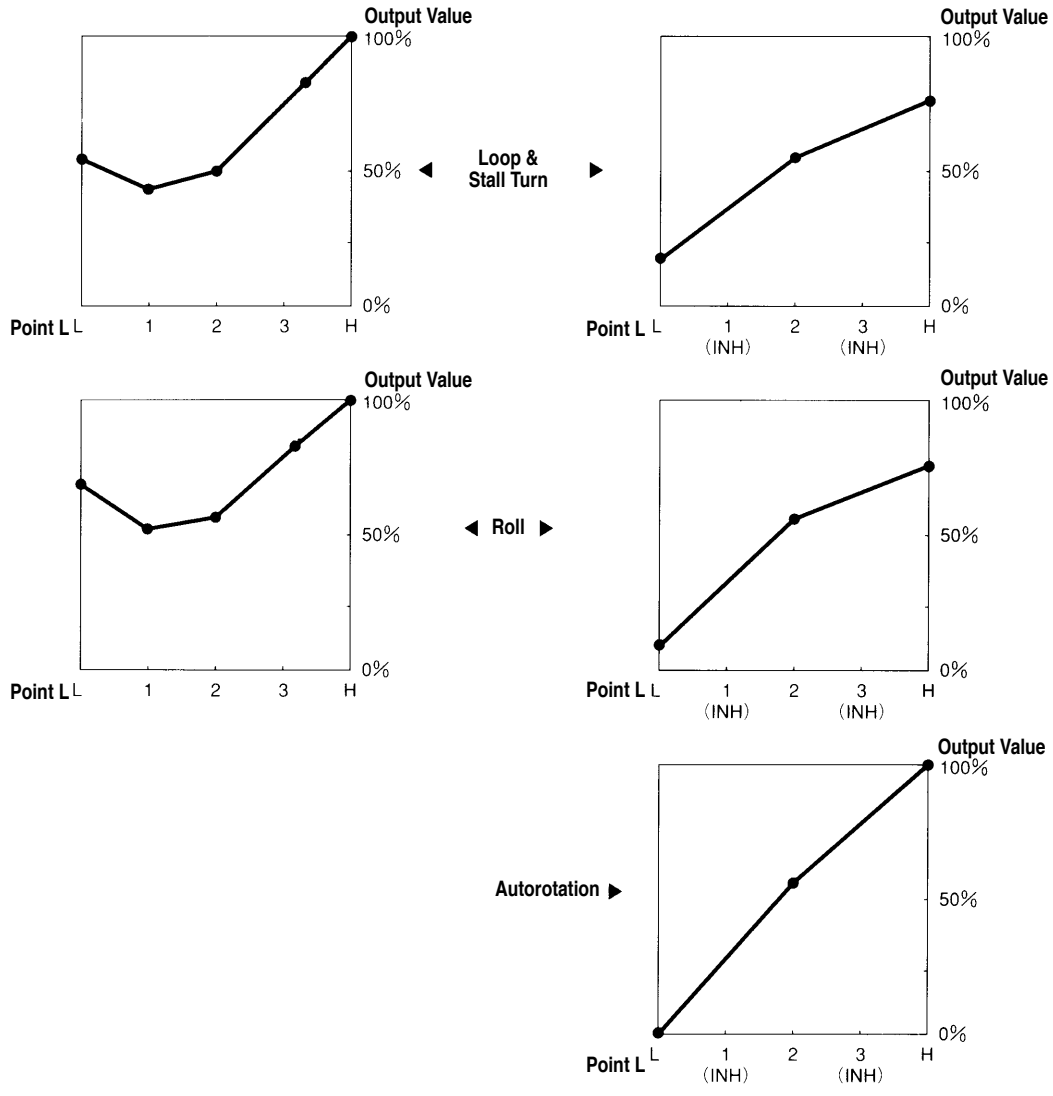

4.10 Inverted Switch (Function Mode)

The purpose of the Inverted Switch Function is to electronically reverse several control directions to enable you to fly a helicopter much more easily inverted. When the inverted switch is pulled down, the inverted flight function is switched ON. When this function is not in use, the display shows INH as below. If you do not intend to use the inverted function, leave this operation inhibited.

In the Function Mode, use the UP and DN keys to select Inverted Switch and access by pressing the UP and DN keys simultaneously.

Inverted Flight Offset Value

This inverted point is the throttle position at which no collective pitch change will take place when the inverted flight function is operated. The higher the value, the further the throttle/ collective stick must be positioned toward the full throttle position. The factory preset is 50%, and it is actually somewhat less than hover throttle since the inverted flight function is normally operated with the stick toward the lower throttle position.

When the inverted flight function is activated, collective, rudder and elevator operations are reversed automatically. For inverted hovering maneuvers, the flight mode switch should be left in the N, or Normal, position. For inverted aerobatic maneuvers, it is recommended that you set up a pitch curve dedicated to inverted flight. This is most often used in conjunction with flight mode, switch position 2.

The throttle curve is operated as a preset curve selected by the flight mode switch and does not affect inverted or normal flight.

Note: The Throttle Hold Function, when activated, has priority over the inverted or flight mode switches.

Refer to the illustrations below to understand the offset values for inverted flight.

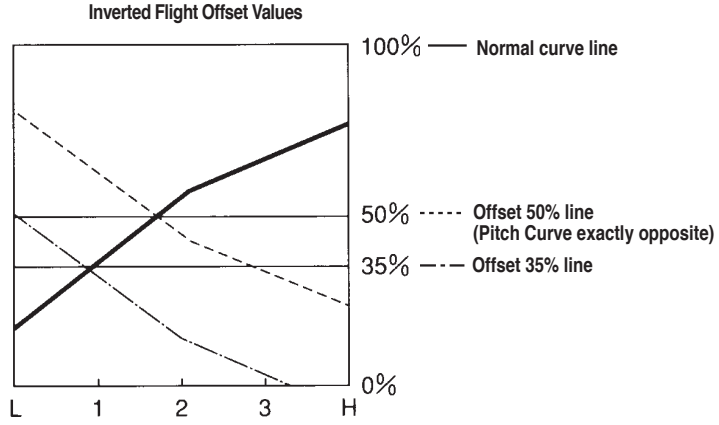

As shown above, when the offset value is set for 50%, the inverted flight pitch curve is exactly opposite from the normal pitch curve settings. If the offset is adjusted to a lesser value, say 35%, the entire pitch curve is lower (relative to the control stick) as shown. Use caution when selecting the correct amount of offset as an inadequate pitch range could result.

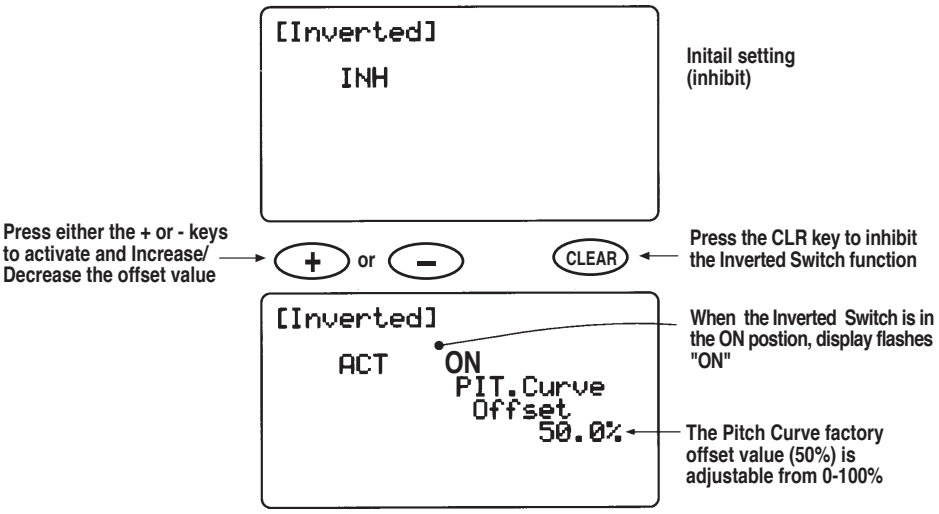

4.10 Inverted Switch, (Function Mode) cont.

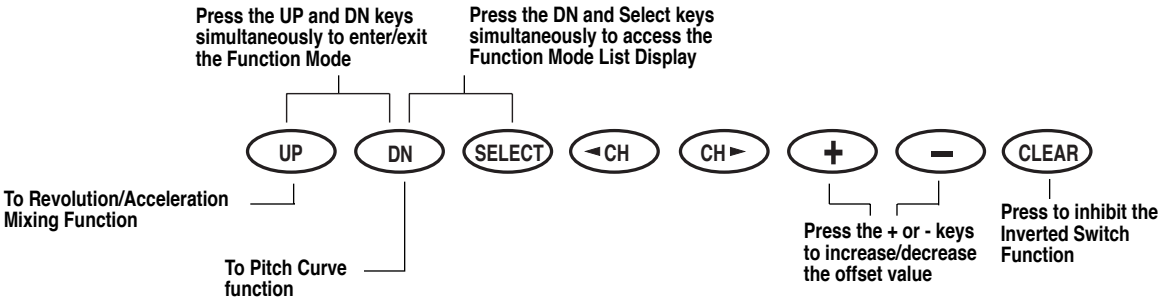

4.11 Revolution/Acceleration Mixing (Function Mode)

The Revolution Mixing Function mixes tail rotor input with the Throttle/ Collective Function to counteract torque from the main rotor blades. When set-up correctly, the helicopter should climb and descend without a tendency to yaw in either direction. Because torque reaction varies with different power settings, it is necessary to vary the tail rotor pitch at the same time. The XP8103 offers two (2) separate revolution mixing programs with independent up and down mixing for each — one for flight mode position N and the other for Stunt 1 and Stunt 2 positions. The U, or Up, mixing adjusts the tail rotor compensation for the mid to high throttle/ stick setting, and the D, or Down, mixing adjusts the tail rotor compensation for the mid to low throttle/ stick setting.

In the Function Mode, use the UP and DN keys to select Revolution Mixing and access by pressing the UP and DN keys simultaneously.

Setting Up Revolution Mixing

First, adjust the helicopter so that it will hover in a neutral position with the tail rotor trim at center. Next, establish the helicopter into a stable hover; then steadily increase the throttle to initiate a stable climb. The body of the helicopter will move in the opposite direction to the main rotor rotation. Increase the U, or Up, setting until the helicopter will climb with no tendency to turn or rotate. At a safe altitude, close the throttle and the helicopter will descend with the body turning in the same direction as the main rotor. Increase the D, or Down, mix until the helicopter descends with no tendency to turn or rotate. When attempting this procedure, throttle stick movements should be slow, and the initial acceleration and deceleration swings should be overlooked.

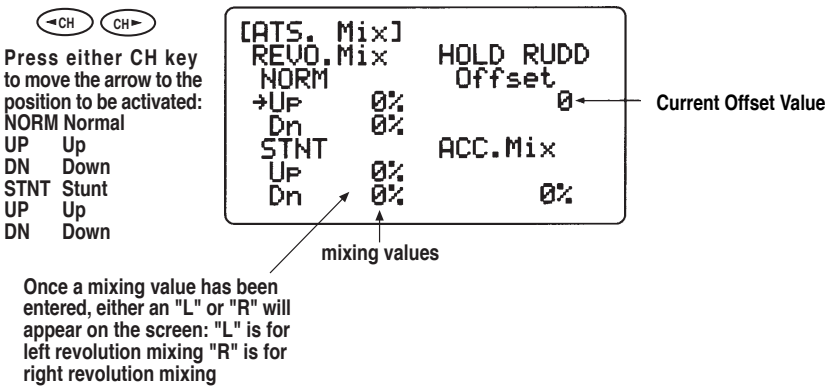

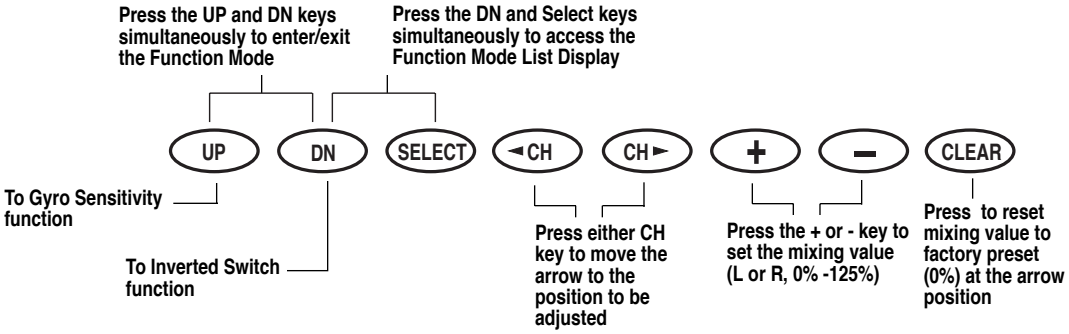

Acceleration Mixing

The Acceleration Mixing function is provided to compensate for the main rotor accelaration (and deceleration) torque. The magnitude and duration of the signal to the tail rotor depends upon rate of the throttle changes. Thus, quick, jerky throttle inputs will yield more noticeable tail compensation. **Note:** The Revolution Mixing Function must be established before an accurate acceleration mix can be achieved, and the gyro should be switched OFF for best results.

Rudder Offset Setting During Throttle Hold

Note that during throttle hold, Revolution and Acceleration Mixing are OFF. At this time, set the offset value of the rudder servo. If this offset value is zero, rudder pitch should be at zero. Set offset value by using the plus or minus keys to correct tail yaw when throttle hold is activated.

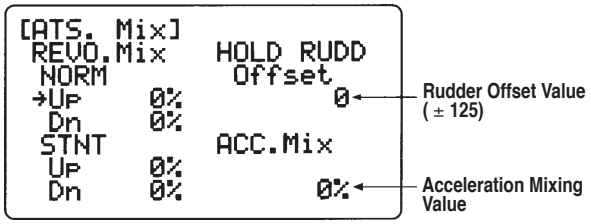

4.12 Gyro Sensitivity Adjustment (Function Mode)

The XP8103 offers two different types of Gyro Sensitivity Adjustments — manual or automatic. This feature gives the user the choice of selecting gyro sensitivity manually through the rudder dual rate switch or automatically through the flight mode switch. A JR NEJ-120S or JR NEJ-1000 gyro system can be used with either of these methods.

In the Function Mode, use the UP and DN keys to select Gyro Sensitivity and access by pressing the UP and DN keys simultaneously.

Manual Gyro Sensitivity Adjustment

Manual Gyro Sensitivity Adjustment allows the pilot to select from two different gyro sensitivities during all flight conditions. This function is activated in conjunction with the rudder dual rate switch.

Automatic Gyro Sensitivity Adjustment

The Automatic Gyro Sensitivity Adjustment feature allows the pilot to automatically alter the sensitivity of the gyro from either of

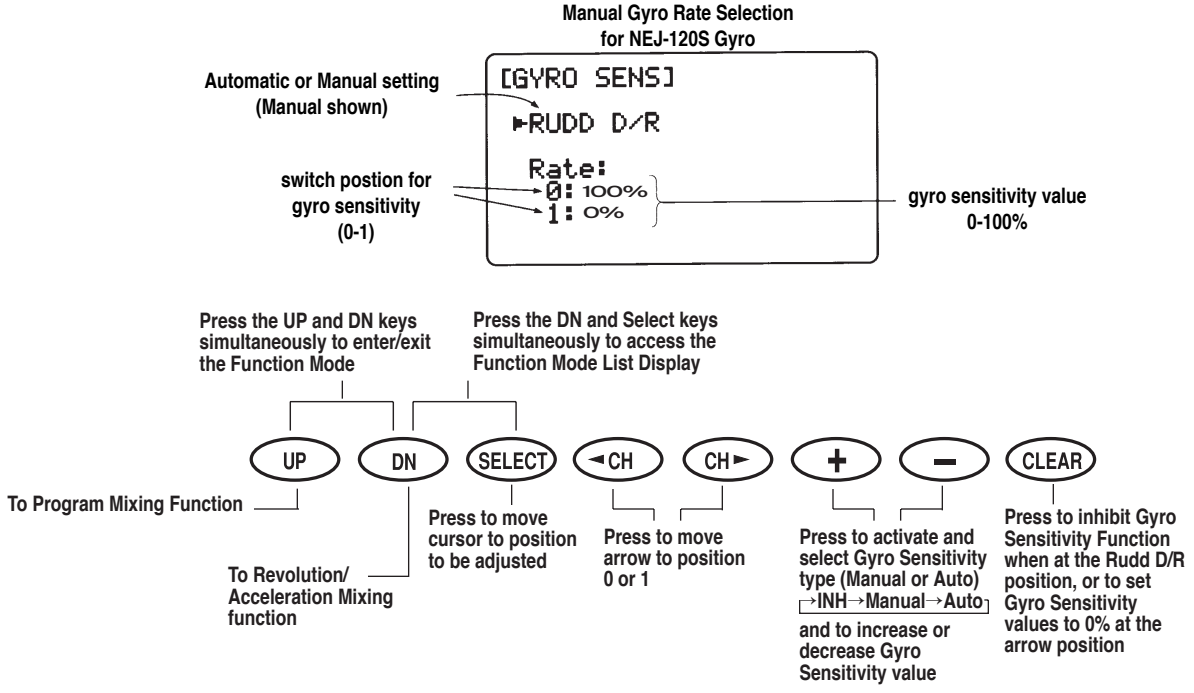

two pre-determined settings through the use of the flight mode switch. As different flight modes are selected (Normal, 1, 2, Hold), the Gyro's sensitivity rate will switch to the pre-determined compensation rate for each particular flight mode in use.

Gyro Installation/Adjustment

JR NEJ-120S Gyro

Gyro Sensitivity Adjustment

Manual Gyro Sensitivity Adjustment

1. Connect the white connector from the NEJ120S gain controller to the AUX2 channel of the receiver.

2. Select the manual gyro sensitivity feature (RUDD D/R will appear on the XP8103 screen).

3. Adjust the 0 position under the RATE on the display to 100% and the 1 position to 0% using the + or - keys.

4. Adjust the gyro sensitivity for positions 0 and 1 on the NEJ120S gain controller.

5. Move the Rudder D/R switch from the low position to the high position with the gyro ON to verify that it is functioning properly, and note the "high/low" sensitivity values relative to the dual rate switch. Refer to the NEJ120S gyro instructions for further information.

Automatic Gyro Sensitivity Adjustment

1. Connect the white connector from the NEJ120S gain controller to the AUX2 channel of the receiver.

2. Select the Automatic Gyro Sensitivity Adjustment Feature ("AUTO" will appear on the screen).

3. Adjust the 0 position under the RATE on the display to 100% and the 1 position to 0% using the + or - keys.

4. Under Function Mode select the gyro rate (position #1 or Position #0) that you wish to be active in each flight mode.

5. Turn the system ON and move the flight mode switch to its 3 positions with the gyro ON to verify that it is functioning properly. Refer to the NEJ120S gyro instructions for further information.

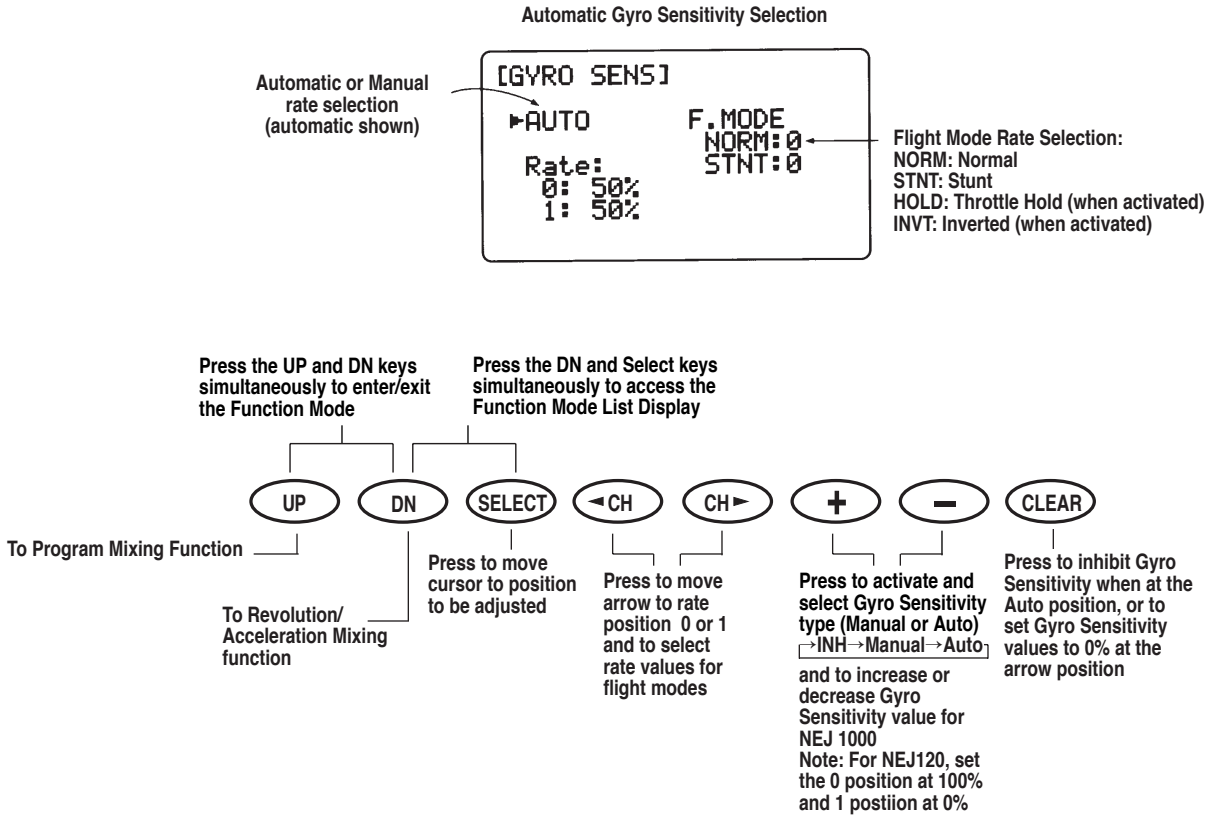

JR NEJ-1000 Piezo Gyro

Manual Gyro Sensitivity Adjustment

1. Connect the white connector from the NEJ-1000 remote gain controller to the AUX2 channel of the receiver.

2. Select the Manual Gyro Sensitivity Feature ("RUDD D/R" will appear on the screen).

3. Adjust the gyro sensitivity values for the 0 and 1 positions from the screen of the XP8103. (Generally, 0 position is used for the lower sensitivity value, with position 1 used for the higher value.)

4. Turn the system ON and move the Rudder D/R switch from the low to high position with the gyro ON to verify that it is functioning properly and to note the 'high/low" sensitivity values relative to the dual rate switch. Refer to the NEJ-1000 gyro instructions for further information.

Automatic Gyro Sensitivity Adjustment

1. Connect the white connector from the NEJ-1000 remote gain controller to the AUX2 channel of the receiver.

2. Select the Automatic Gyro Sensitivity Adjustment Feature ("AUTO" will appear on the screen).

3. Adjust the gyro sensitivity values for the 0 and 1 positions from the screen of the XP8103. (Generally, 0 position is used for the lower sensitivity value, with position 1 used for the higher value.)

4. Select the compensation values for each of the four flight mode positions from the XP8103 screen (Normal, 1, 2, Hold).

5. Turn the system ON and move the flight mode switch to its 3 positions with the gyro ON to verify that it is functioning properly. Refer to the NEJ-1000 gyro instructions for further information.

4.13 Programmable Mixing 1-3 (Function Mode)

The XP8103 offers three programmable mixes that can be used for any number of different purposes. Mixes #1 and #2 feature a 5-point programmable mixing system with graphic display, while the 3rd mix is of the standard 3-point variety. This function allows mixing any one channel to any other channel to make the aircraft easier to fly. This mix can be set in the computer and remain on at all times, or it can be switched on and off in flight using a number of different switches. The channel appearing first is known as the master channel, or the channel to which you want to mix. The second channel is known as the slave channel, or the channel that is being mixed into the previous channel.

For example, aileron to rudder mix would indicate that the first (aileron) channel is the "master," with the second (rudder) channel acting as the "slave." Therefore, each time the aileron stick is moved, the aileron will deflect, and the rudder will automatically move in that direction and to the value input. Mixing is proportional, so small inputs of the master channel will produce small outputs of the slave channel. Each programmable mix has a mixing "offset." The purpose of the mixing offset is to redefine the neutral position of the slave channel.

Mixing 1 and 2 are freely programmable curve mixing at any 5 points of the master channel. The figure on the following page shows Mix 1 is inhibited.

Programmable Mix #1 and #2 Channel Selection

As mentioned, programmable mixes #1 and #2 are of the multi-point variety, allowing the use of up to 5 adjustable points to vary or "curve" the mix for precise adjustment. Diagram #1 below shows Mix #1 in the inhibited position. To activate mix #1, press either the + or - key. After the mix has been activated, press either the + or - keys to select the first, or master, channel to be mixed. Next, press either of the CH keys to move the underlined cursor to the right. Then press either the + or - keys to select the second, or slave, channel to be mixed.

Operational Switch Settings

The programmable mixes can be turned on and off in flight using a variety of different switches. The chart below lists the indication seen on the LCD display and its definition:

Program Mix #1 Switch Settings	
ON	On at all times
F-NR	On at flight mode switch at normal position
F-S12	On at flight mode stunt #1 and stunt #2 positions
F-S2	On at flight mode stunt #2 position

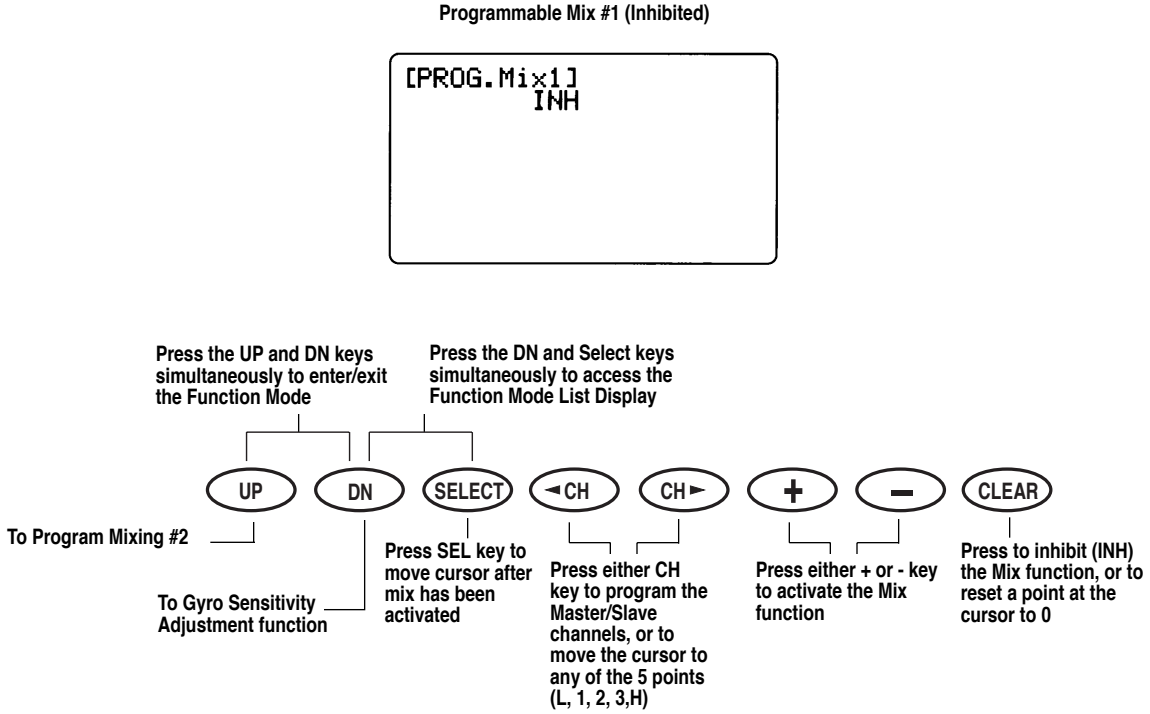

Program Mix #2 Switch Settings	
On	On at all times
Hold	On at throttle hold position
FS12	On at flight mode stunt #1 and stunt #2 positions
Gear	On at gear/ inverted switch "on" position

To select the desired switch setting, press the SEL key twice to move the cursor to the SW position on the LCD screen. Next, press either the + or - keys to select the desired switch setting.

Mixing Point Adjustment

The 5-point Programmable Mixing Function found in programmable mixes #1 and #2 allows you to manipulate one or all of the point values to create a non-linear "curve" of the second, or slave, servo output. Adjustment of this curve only affects the second, or slave, channel and has no effect on the servo output of the first, or master, channel. Points 1 and 3 are inhibited, or inactive, until the user has input a value to the particular mixing point.

To adjust the points, press the SEL key until the cursor is in line with the "Point L" as indicated on the LCD display. Next, press either CH key to select the point to be adjusted.

To change the value of the selected point, press either the + or - key. The input value for the point being adjusted will be visible under the "Point" portion of the LCD display. Both stick input and servo output values will be shown at the lower left portion of the LCD display.

Note: The servo output value will not be displayed on the screen unless the operational switch selected is in the proper position to activate the programmable mixing function.

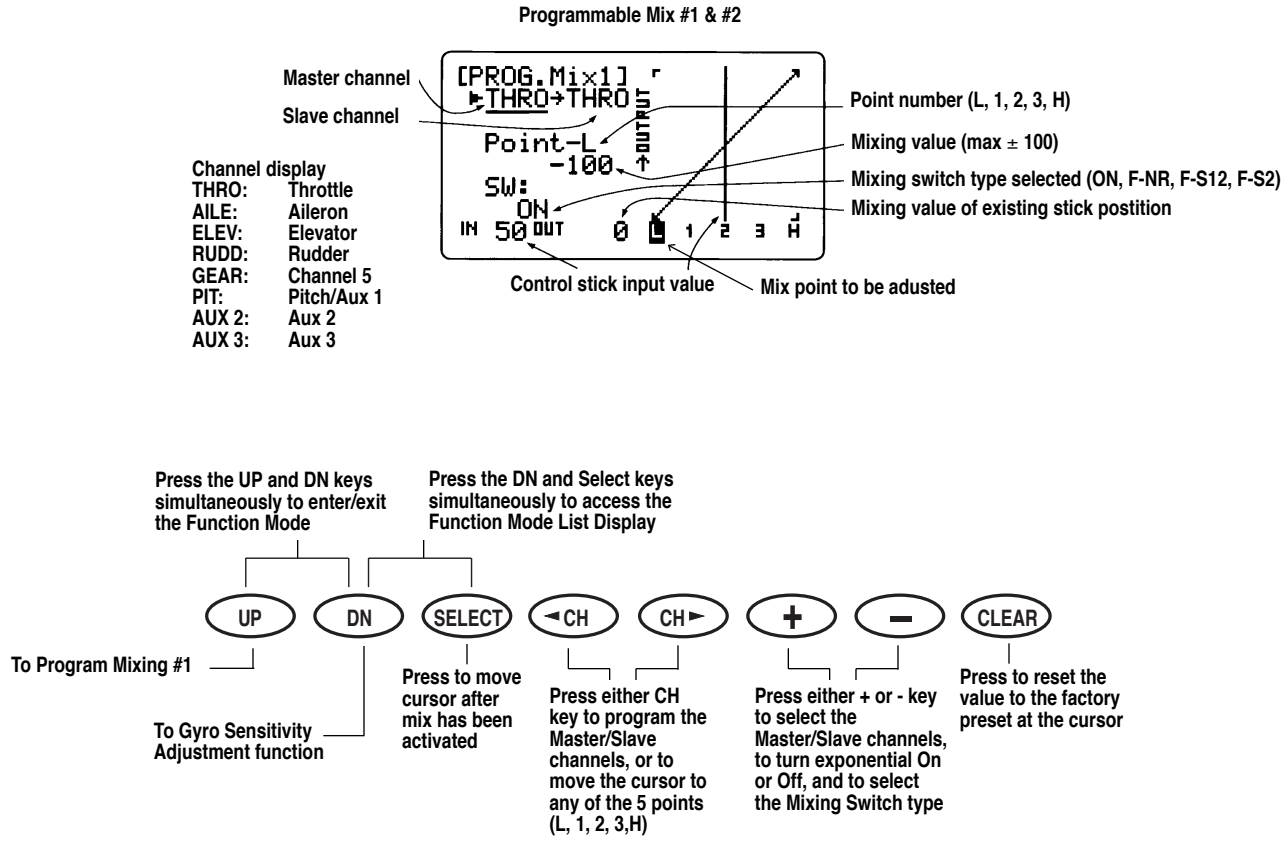

Programmable Mix #3

Programmable Mix #3 is similar to the previous mixes, with the exception that there are only 3 positions where output values can be adjusted.

As in the previous mixes, the first channel is considered the master channel, with the second channel selected as the slave channel.

This mix can be set in the computer and remain on at all times, or it can be switched on and off in flight using a number of different switches.

Programmable Mix #3 uses a high and low mixing value adjustment, as well as a mixing offset value to redefine the neutral position of the slave channel.

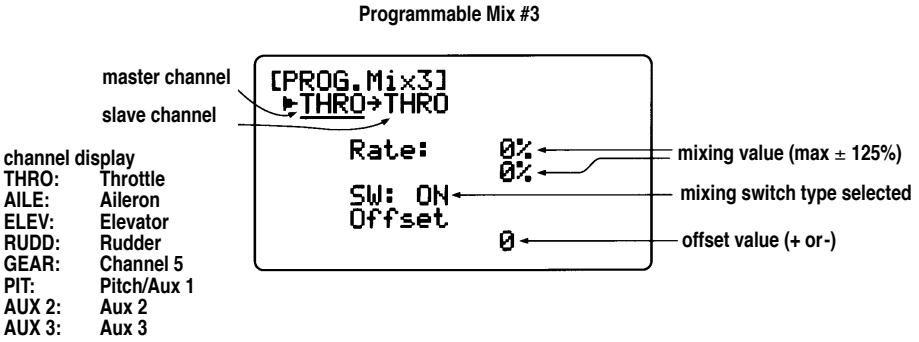

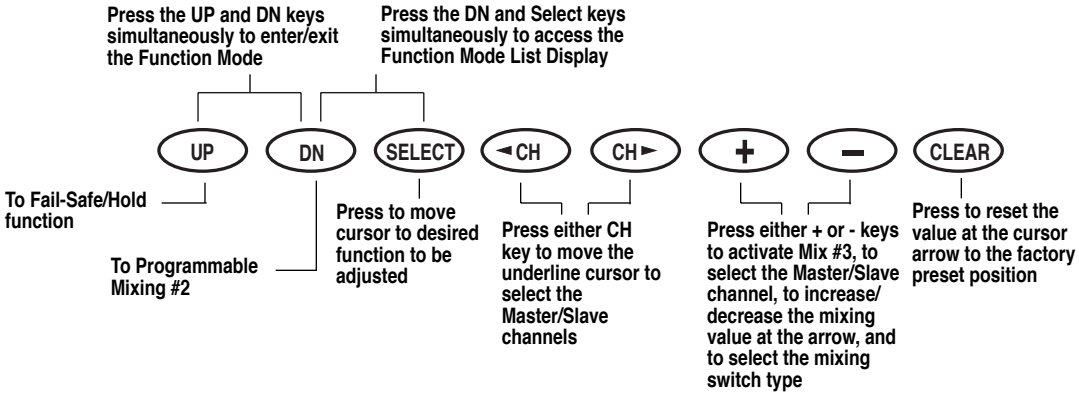

Channel Selection

Before selecting the desired channels to be mixed, you will need to activate the Programmable Mix #3 Function by pressing either the + or - keys once. Next, press either the + or - keys until the first, or master, channel desired is displayed. To select the desired slave, or second, channel, press either of the CH keys once to move the underlined cursor to the right. Then press either the + or - keys to select the second or slave channel to be mixed.

Operational Switch Settings

The programmable mixes can be turned on and off in flight using a variety of different switches. The chart at right lists the indication seen on the LCD display and its definitions.

Program Mix #3 Switch Settings	
On	On at all times
FNR	On at flight mode switch at normal settings
FS12	On at flight mode stunt #1 and stunt #2 positions
FS2	On at flight mode stunt #2 position

To select the desired switch setting, press the SEL key twice to move the cursor to the SW position on the LCD screen. Next, press either the + or - keys to select the desired switch setting.

Rate Adjustment

The Rate Adjustment Function found in the Programmable Mix #3 Function allows you to increase or decrease the amount of mixing (servo travel) given to the slave channel in either the high/ low, or left/ right positions. Adjustment of this value will only affect the mixing value (output) of the slave channel, and it has no effect on the servo output value of the master channel.

To adjust the mixing rate, press the SEL key until the cursor is in line with the "Rate:" as indicated on the LCD display. The arrow shown to the right of the "Rate:" indicates the position to be adjusted. This arrow is manipulated only by the control stick/ switch of the selected master channel. Move the control stick to bring the arrow to the desired point of adjustment.

Note: The arrow will not be displayed on the screen unless the operational switch selected is in the proper position to activate the Programmable Mixing Function.

To adjust the rate value, press either the + or - key until the desired value has been achieved.

Programmable Mixing Offset

Any position of the master channel can be determined as the basic point (center) of mixing. The basic point is the position of the master channel stick, control switch, or knob where you set the mix value and the direction of mixing. To set the basic point of mixing, press the SEL key until the cursor is in line with the "offset" as displayed on the LCD screen. Next, move the master channel control stick to the desired position and press the CLR (store) key once to store the offset value. The stored offset value will now be displayed at the bottom of the LCD display.

This offset value is the amount of offset value as determined from neutral. However, the mixing value at the determined position will indicate zero.

4.14 Fail-Safe/Hold

The Fail-Safe/ Hold Function is available only when you use the XP8103 transmitter in either of the PCM modulations — S-PCM or Z-PCM. This function is designed to help minimize damage to your airplane during a loss of signal to the receiver. The servos either assume the fail-safe presets or hold the last good signal position.

Note: In the PCM modulations, the Fail-Safe/ Hold Function cannot be totally disabled so that the servos will react to interference in the same way as they do in a PPM system. This is only possible with the use of a PPM receiver and the transmitter in the PPM modulation.

Note: Since the actual screen appearance varies, depending on the modulation of your radio, refer to the appropriate modulation section which follows (Z-PCM, S-PCM).

As noted earlier, if you are in the PPM modulation, the Fail-Safe/ Hold Function is not applicable. Therefore, the Fail-Safe/ Hold Function will not appear on your LCD in the PPM mode.

Refer to the Modulation Selection Section for more information pertaining to the broadcast signal of your XP8103 transmitter.

Accessing the Fail-Safe/Hold Function in Z-PCM Modulation

Hold (Z-PCM)

The Hold Function is automatically activated when the radio is turned ON and is in the Z-PCM modulation.

This function stops (or holds) the servos in the positions they were in just prior to the interference. Therefore, your airplane maintains the position held immediately before the interference was experienced. When a clear signal is restored, the Hold Function releases, and control of the airplane returns to you.

1. Place the transmitter power switch in the ON (upper) position.

2. While the power switch is in the ON position, press the UP and DN keys simultaneously to access the Function Mode.

3. Press either the UP or DN key until Fail-Safe appears in the left portion of your LCD.

Note: If Fail-Safe does not appear on your LCD, it is because you are transmitting in PPM. Fail-Safe is not applicable in the PPM mode. Refer to the Modulation Mode Selection Section for more information.

When the Fail-Safe Function is activated (i.e., when the signal is interrupted), the transmitter automatically moves each servo to a preset position. The position that each servo assumes is determined by you, as is the time length of interference that must occur before servo movement.

After the interference has ceased, control of the airplane returns immediately to you.

There are three time delays to choose from: 1/ 4 (0.25) second, 1/ 2 (0.50) second and 1.0 second. These time delays are the amount of time it takes, starting the moment the interference occurs, until the servos assume their preset positions.

Setting Fail-Safe/Hold Memory in Z-PCM Modulation

1. After accessing the Fail-Safe Function, it is time to adjust the Fail-Safe presets.

2. Select among the three time delays (1/ 4, 1/ 2 or 1.0 seconds). To do so, simply press the + or - key until the appropriate delay appears on the screen.

3. Hold the transmitter sticks in the position that you want the servos to assume during signal loss conditions. You can determine fail-safe preset positions for the other channels by placing the potentiometers and switches in the positions that you want them to assume during interference.

4. With the sticks, switches and potentiometers in the fail-safe positions, touch the CLR key. This will enter these locations as the fail-safe memory settings. A high pitched beep will indicate that this setting has been stored.

5. To confirm that the input of data was successful, switch the transmitter OFF. The controls will move to the input locations. If not, repeat step 4 again.

6. To exit the Fail-Safe Function, press the UP and DN keys simultaneously.

Note: These preset positions remain stored in the transmitter's memory until both the transmitter battery pack and the lithium back-up battery have been removed (or until data reset has been performed). Therefore, you do not have to reset the fail-safe each time you fly. Should you want to re-adjust the fail-safe presets, access the Fail-Safe Function and adjust the presets as you have just done. The transmitter automatically recalls the settings for the last fail-safe adjustment.

Accessing the Fail-Safe/Hold Memory in S-PCM Modulation

Hold (S-PCM)

The Hold Function is automatically activated when the radio is turned ON and in the S-PCM modulation.

This function stops (or holds) the servos in the positions they were in just prior to the interference. Therefore, your airplane maintains the position held immediately before the interference was experienced. When a clear signal is restored, the Hold Function releases, and control of the aircraft returns to you.

1. Place the transmitter power switch in the ON (upper) position.

2. While the power switch is in the ON position, press the UP and DN keys simultaneously to access the Function Mode.

3. Press either the UP or DN key until Fail-Safe appears in the left portion of your LCD.

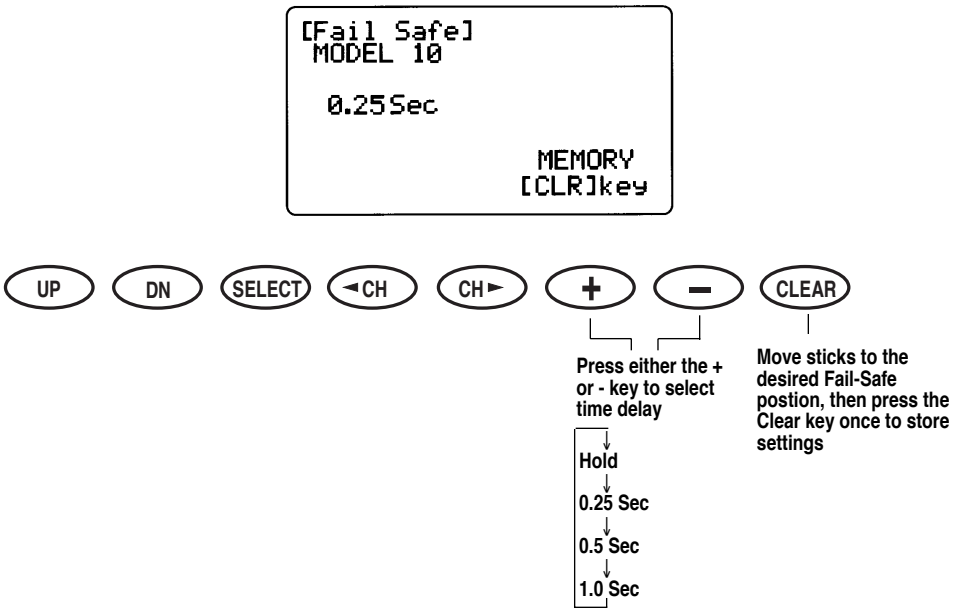

Note: If Fail-Safe does not appear on your LCD, it is because you are transmitting in PPM. Fail-Safe is not applicable in the PPM mode. Refer to the Modulation Mode Selection Section for more information.

Fail Safe/Hold Combination in S-PCM Modulation

The XP8103 allows you to combine the hold and fail-safe presets for all eight (8) channels on the receiver — you can select fail-safe or hold independently for all channels on your aircraft. In other words, some channels will hold their last clear signal position, while others assume the preset position. Once the fail-safe has been activated by signal interruption (interference), the transmitter automatically moves the servos to a preset position. The predetermined servo positions are set by you. In the S-PCM fail-safe, the time delay (the amount of time it takes, starting the moment the interference occurs, until the servos assume the preset positions) is fixed at .25, or 1/ 4, second.

After the interference has ceased, normal operation of the airplane returns to you immediately.

Setting the Fail-Safe/Hold Memory in S-PCM Modulation

1. After accessing the Fail-Safe Function, it is time to adjust the fail-safe presets.

2. Select all of the channels for which you want to enter a fail-safe preset. This is done by pressing the left or right CH key and moving the cursor arrow over the desired channel. Pressing the + or - key will cause the particular channel to assume a "hold" or "preset" fail-safe condition which is determined by positioning the particular control and pressing the CLR key. The transmitter will memorize the switch fail-safe position and automatically transfer the setting to the receiver.

3. Confirmation of proper fail-safe presets/ holds is made by turning the transmitter OFF and observing the aircraft's control functions.

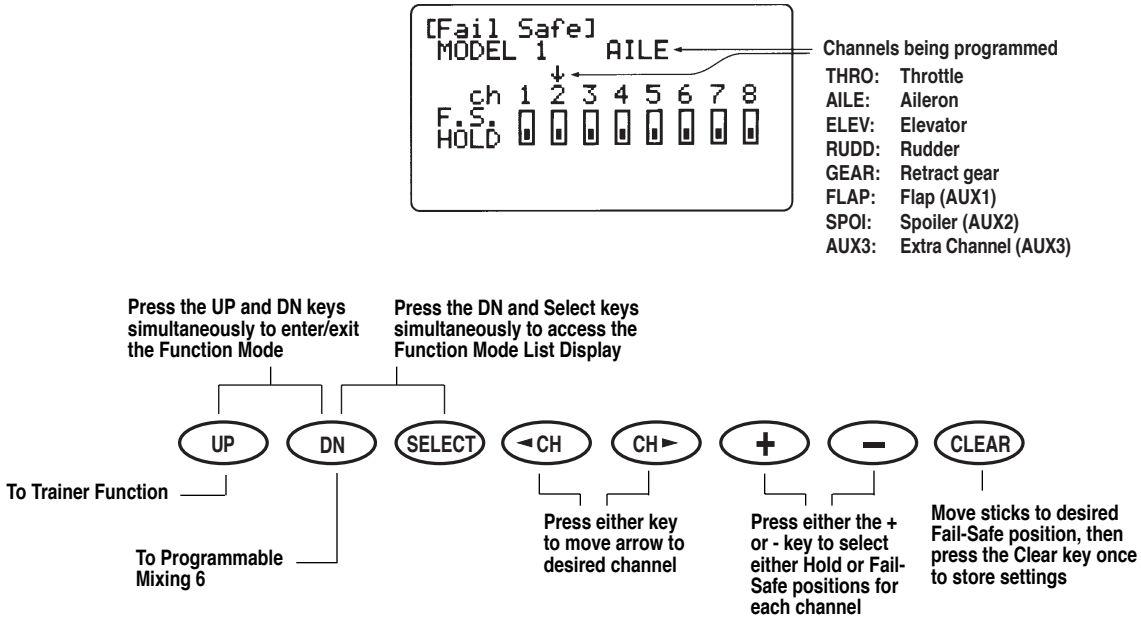

The XP8103 transmitter employs two separate types of trainer systems:

A. Normal trainer system — all functions are controlled by either the master transmitter or the slave transmitter.

B. Programmable function trainer — stick functions may be assigned to the slave one at a time. Since the control functions can be transferred one at a time, students can concentrate on only one function at a time until they are competent to fly solo.

Basic Connections and Limitations

1. The slave transmitter must be PPM (Pulse Position Modulation) with a DSC (direct servo control) jack. If the slave transmitter is PPM/ PCM selectable, select PPM. The master transmitter can be S-PCM, Z-PCM or PPM.

2. Plug the trainer cord into each transmitter's DSC jack. Note each transmitter will appear to be ON, but neither is actually transmitting at this time.

3. Switch the master transmitter ON. **Do not switch on the slave transmitter**; you must only have the master transmitter ON.

4. Pull the trainer switch on the Master transmitter toward you to transfer control to the slave. Releasing the switch automatically reverts control to the master transmitter.

5. Be sure the slave transmitter servo reversing, dual rates, and point adjustment and trims are identical to the master transmitter. This can be checked by pulling the trainer switch toward you. If the control surfaces move, adjust the slave transmitter until the trainer switch can be activated without a change of the control surface position.

A. Using the Normal Trainer System

In this mode, all functions are switched from the master to the slave using the trainer switch. This is the normal mode. No function set-up (reversing switch or travel adjust) is necessary to activate this system.

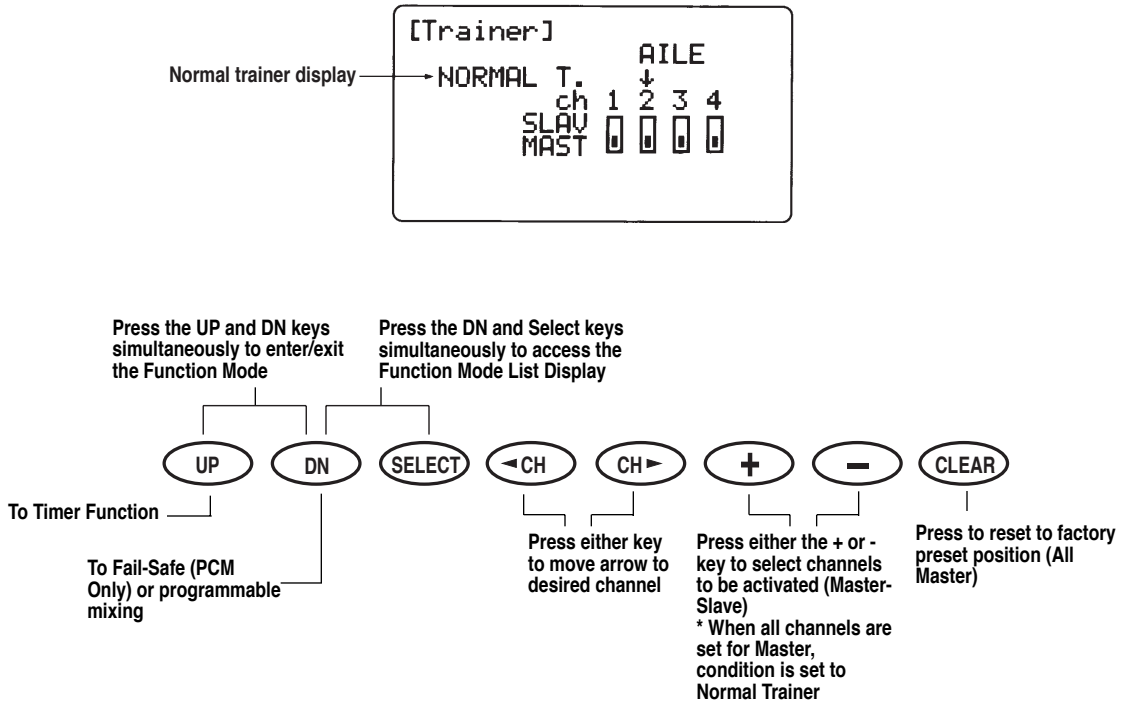

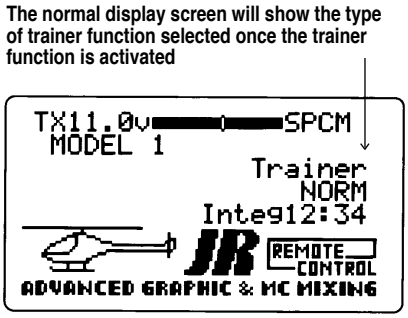

B. Use of Programmable Trainer Function

In this mode, the master may assign functions to the student one at a time to make learning to fly easier. For example, the master may assign the slave rudder and elevator. Then, when the trainer switch is activated (pulled toward you), the slave has control of only rudder and elevator while the master retains control of throttle and aileron.

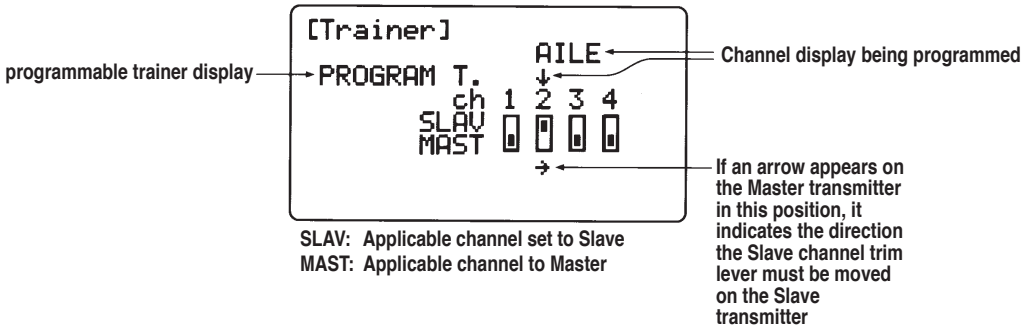

4.16 Timer (Function Mode)

The XP8103 offers two separate types of timer functions — countdown and stopwatch. In the countdown mode, the transmitter will beep at 30 seconds. At zero, the time will begin counting up with a + indication. Up count will count up to 59:59 (59 minutes 59 seconds).

Count start and stop operations are activated by the snap roll/ trainer switch. But when using it as the trainer's master transmitter, start/ stop by this switch is inhibited.

Accumulated time

Accumulated time is for each model and returns to zero at 100 hours. You may use them as individual model's maintenance hours.

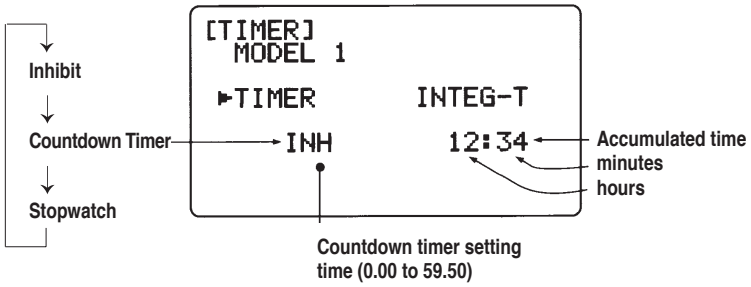

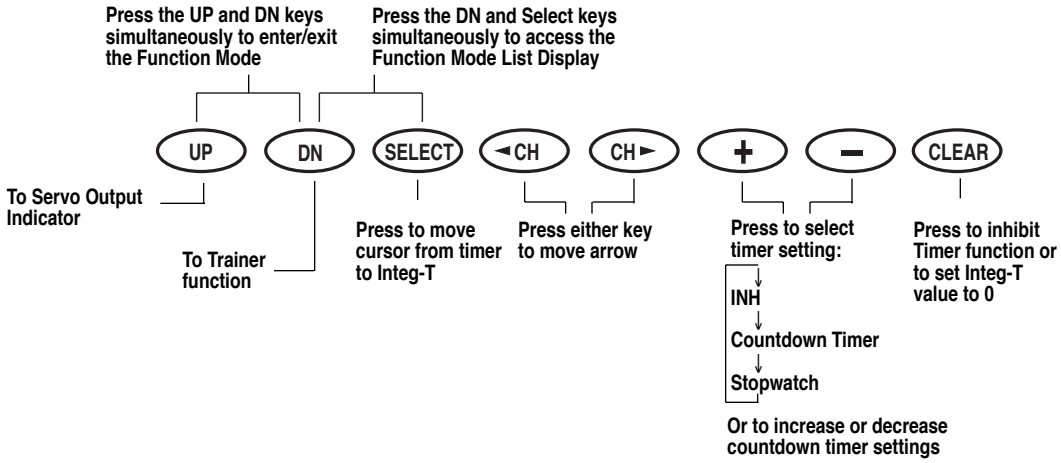

NORMAL DISPLAY w/down timer function selected

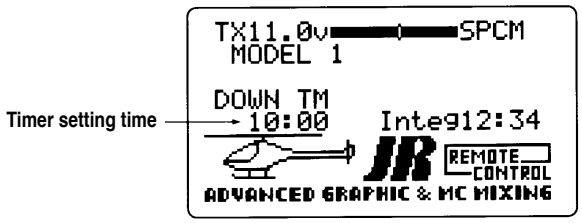

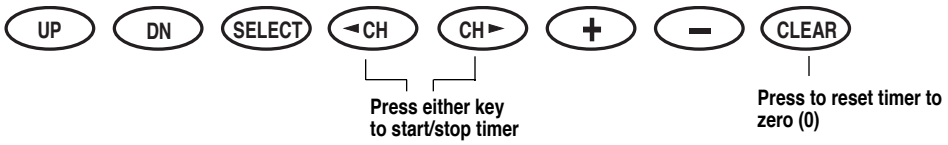

4.17 Servo Output Indicator (Function Mode)

This function displays each servo's operating value. Each bar center indicates neutral position. Left or right dots indicate 50%, 100% and 150%.

Note: All indications are actual positions including adjustments and mixing. It is also possible to view servo travel/ servo directions when mixing functions are activated.

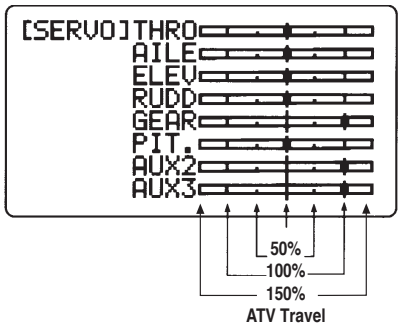

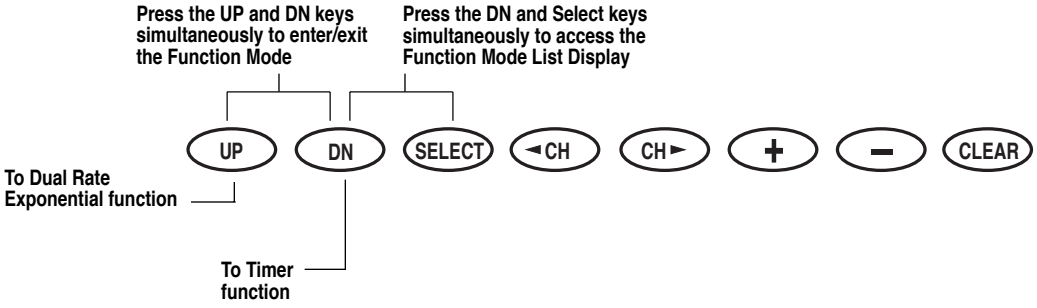

XP8103 DATA SHEET HELI

MODEL NO. _____

MODEL NAME _____

MODULATION SPCM - ZPCM - PPM _____

			AILE	ELEV	RUDD
DUAL-RATE • EXP	0	D/R	%	%	%
		EXP	%	%	%
	1	D/R	%	%	%
		EXP	%	%	%
STUNT TRIM	INH • ACT				

AUTO D/R (POS. 1)	ST1	INH • ACT
	ST2	INH • ACT
	ST2	INH • ACT

INPUT SEL	AUX2	HOLD SW • PIT.TRIM • INH
	GEAR	ACT • INH

	THRO	AILE	ELEV	RUDD	GEAR	PIT	AUX2	AUX3
REVERSE SW	NORM • REV	NORM • REV	NORM • REV	NORM • REV	NORM • REV	NORM • REV	NORM • REV	NORM • REV
SUB TRIM								
TRAVEL ADJUST	H %	L %	D %	L %	+ %	H %	+ %	+ %
	L %	R %	U %	R %	- %	L %	- %	- %
FAIL SAFE (SPCM)								

		EXP	L	1	2	3	H
THROTTLE CURVE	N	OFF • ON	%	%	%	%	%
	1	OFF • ON	%	%	%	%	%
	2	OFF • ON	%	%	%	%	%
PITCH CURVE	N	OFF • ON	%	%	%	%	%
	1	OFF • ON	%	%	%	%	%
	2	OFF • ON	%	%	%	%	%
	N	OFF • ON	%	%	%	%	%

GYRO SENS	INH • RUDD D/R • AUTO	0	%
		1	%
		NORM	
		STNT	
		HOLD	
		INVT	

THRO HOLD	INH • ACT	POS
		%

THRO HOLD	INH • ACT	OFFSET
		%

REVO MIX	NORMAL	UP	%
		DOWN	%
	STUNT	UP	%
		DOWN	%
	HOLD RUDD OFFSET		
ACC MIX			%

		CHANNEL	SW	EXP	L	1	2	3	H
PROGRAM MIX	MIX1	→		OFF-ON					
	MIX2	→		OFF-ON					
				+POS		-POS		OFFSET	
	MIX3	→		%		%			

V. Glider Section

Important: Before installing your servos in your glider's wing, see page 134, Servo Installation Section.

Note: The Practical Application Section on page 134 provides a step-by-step procedure on programming a 5 or 6 servo equipped glider. Reference to this section is highly recommended prior to setting up your glider.

1. Transmitter Controls

1.1 Control Identification and Location

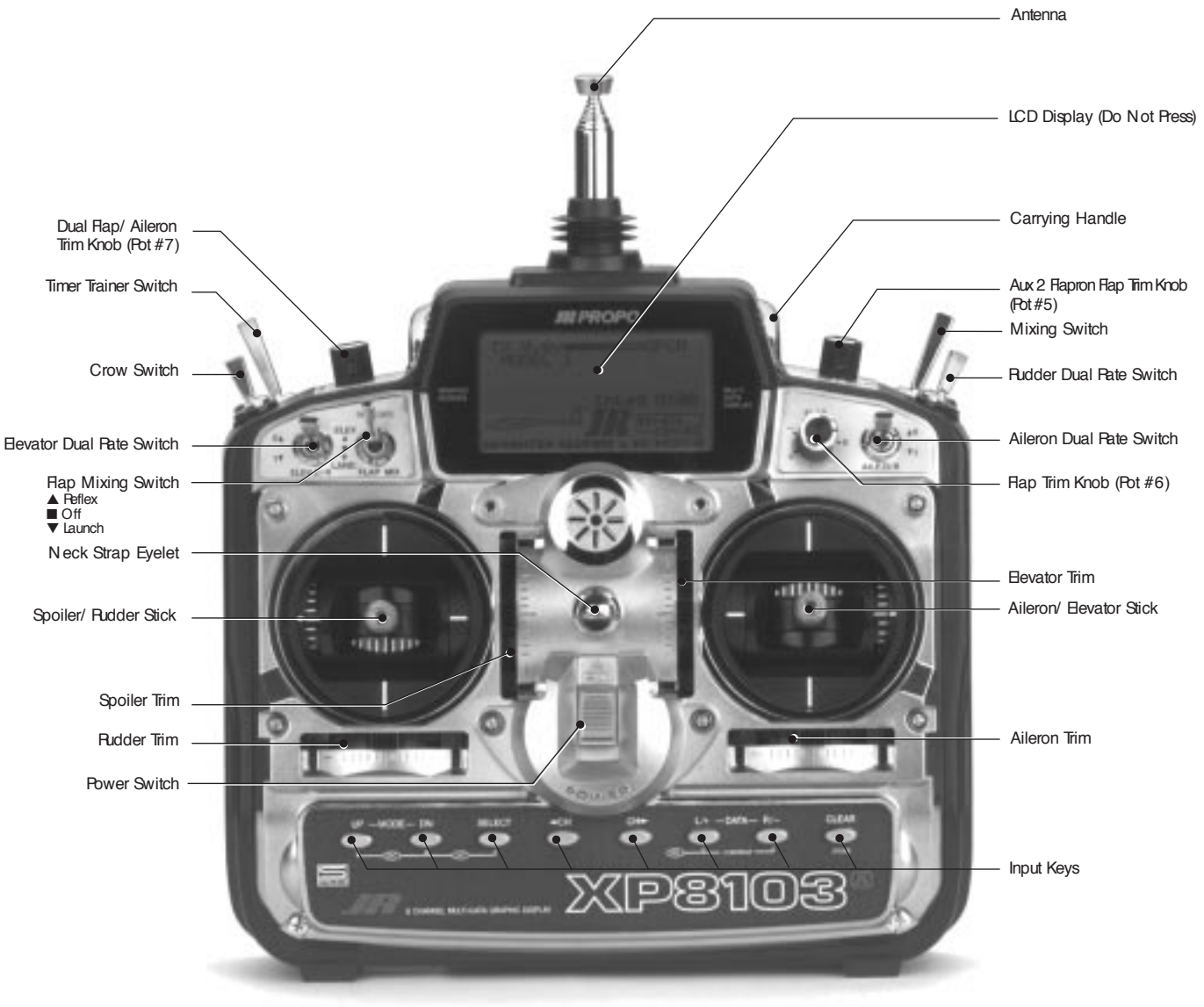

Channel Assignment/Throttle ALT

Channel #	TX Function	Airplane Function
1	Spoi	Spoiler Channel
2	Ail 1	Left Aileron Channel (AIL1)
3	Elev	Elevator Channel
4	Rudd	Rudder Channel
5	Ail 2	Right Aileron Channel (AIL2)
6	Flap	Left Flap Channel for Dual Flaps
7	Aux 2	Right Flap Channel for Dual Flaps
8	Aux 3	Auxillary 3 Channel

Throttle ALT

This function makes the spoiler stick trim active only when the spoiler stick is at less than 50%, which allows for fine adjustment of the spoilers with the spoiler stick in the lower position.

Airplane Version Transmitter – Airplane Mode

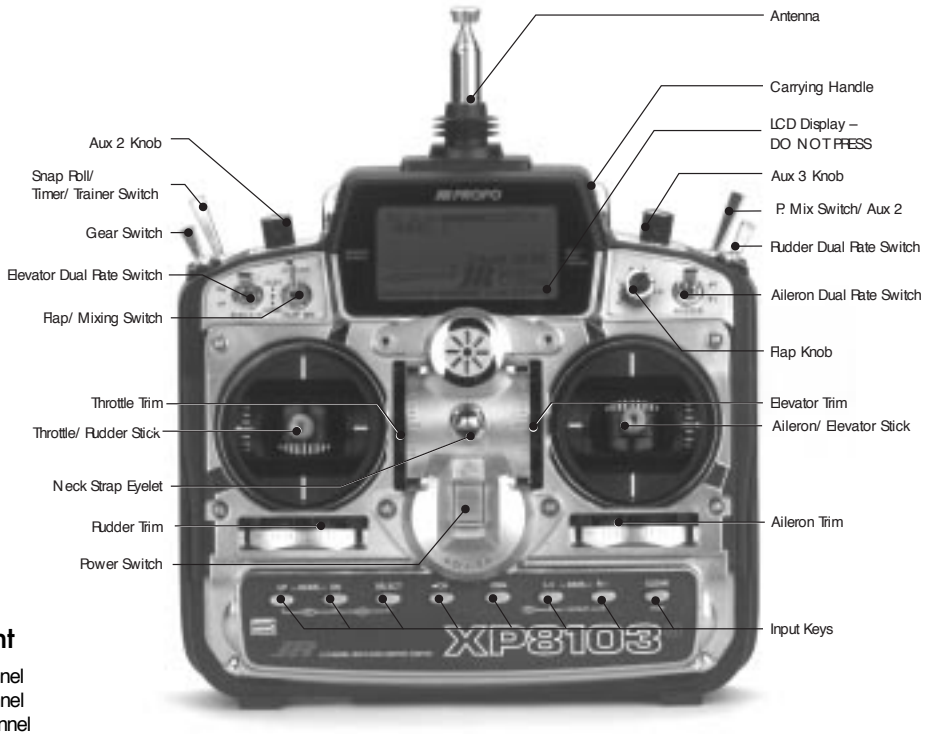

Channel Assignment

1. THRO Throttle Channel
2. AILE Aileron Channel
3. ELEV Elevator Channel
4. RUDD Rudder Channel
5. GEAR Gear Channel
6. AUX1 Auxiliary 1 Channel (Flap)
7. AUX2 Auxiliary 2 Channel (Spoiler)
8. AUX3 Auxiliary 3 Channel

Airplane Version Transmitter – Heli Mode

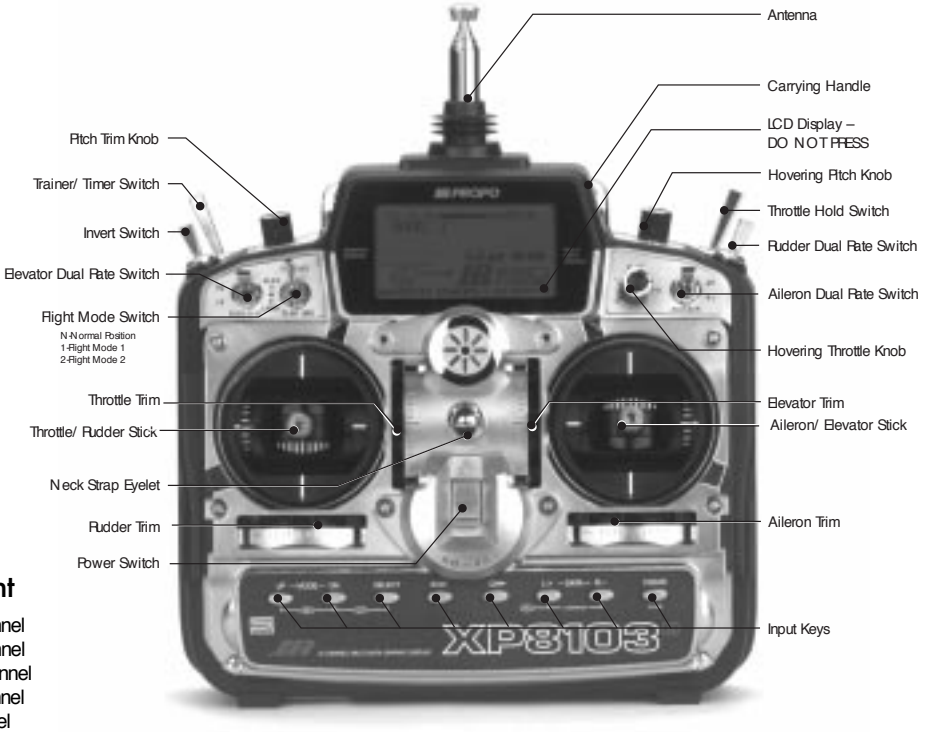

Channel Assignment

1. THRO Throttle Channel
2. AILE Aileron Channel
3. ELEV Elevator Channel
4. RUDD Rudder Channel
5. GEAR Gear Channel
6. AUX1 Auxiliary 1 Channel (Pitch)
7. AUX2 Auxiliary 2 Channel (Gyro Sensitivity)
8. AUX3 Auxiliary 3 Channel

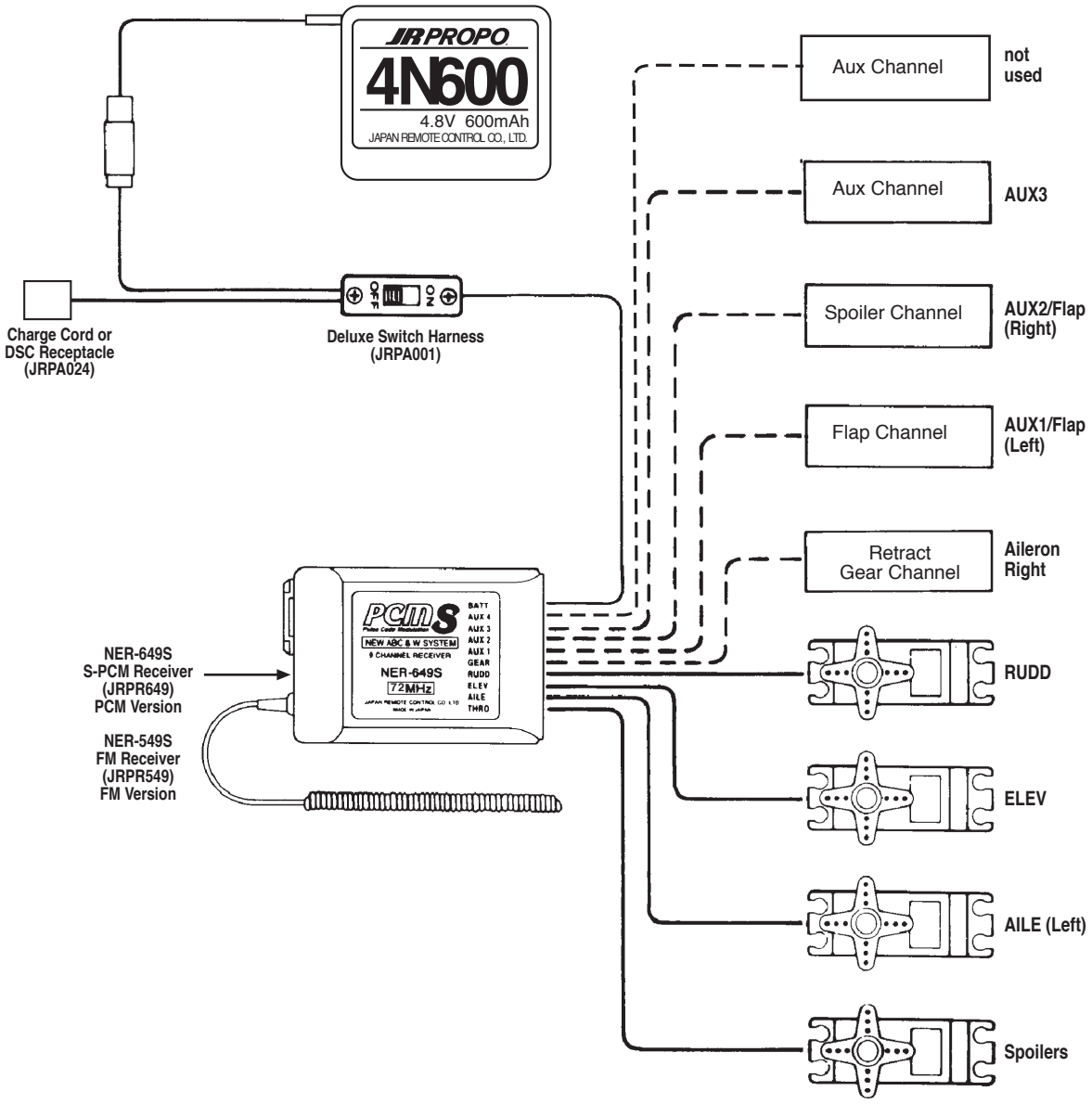
JR PROPO
4N600
4.8V 600mAh
JAPAN REMOTE CONTROL CO., LTD.
Charge Cord or
DSC Receptacle
(JRPA024)
Deluxe Switch Harness
(JRPA001)
NER-649S
S-PCM Receiver
(JRPR649)
PCM Version
NER-549S
FM Receiver
(JRPR549)
FM Version
PCM S
NEW ABC & W SYSTEM
9 CHANNEL RECEIVER
NER-649S
72MHz
BATT
AUX 4
AUX 3
AUX 2
AUX 1
GEAR
RUDD
ELEV
AILE
THRO
Aux Channel
not
used
Aux Channel
AUX3
Spoiler Channel
AUX2/Flap
(Right)
Flap Channel
AUX1/Flap
(Left)
Retract
Gear Channel
Aileron
Right
RUDD
ELEV
AILE (Left)
Spoilers

2. General Information

2.1 Input Key Functions

• You will hear a clicking (beeping) sound to confirm input has been achieved.

• Except for the CLEAR key, the AUTO advance system (two speed scrolling) is active when you continue pressing down on a key.

• The SEL keys or CH keys are used to scroll through, or manipulate functions within a specific program or display.

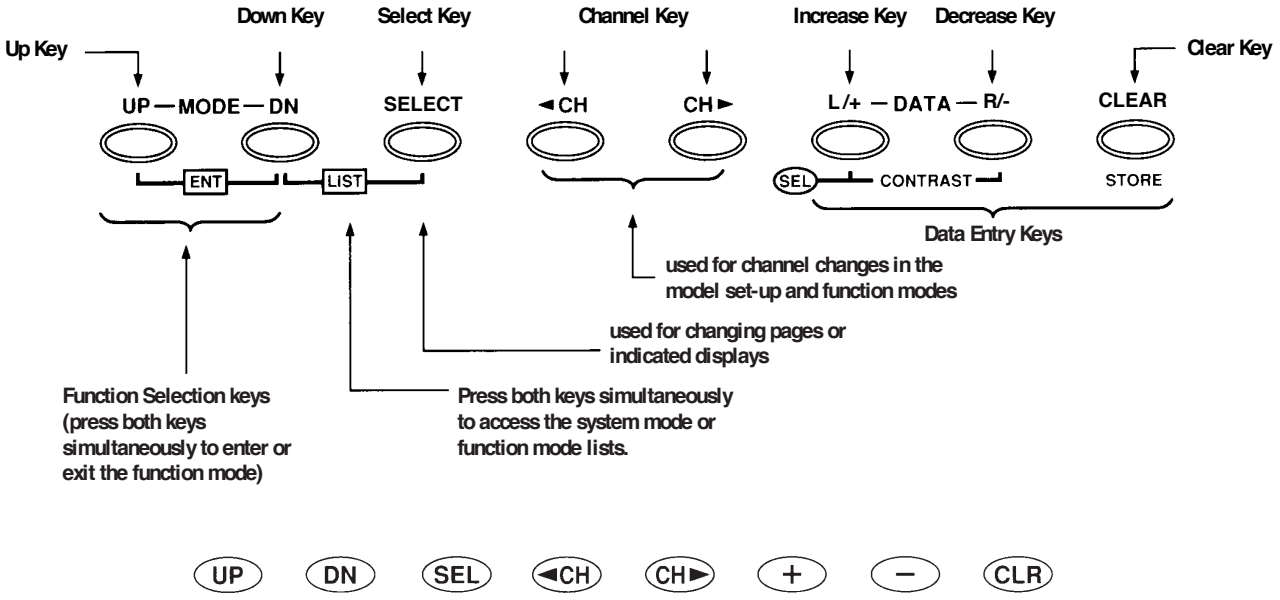

2.2 Normal Display

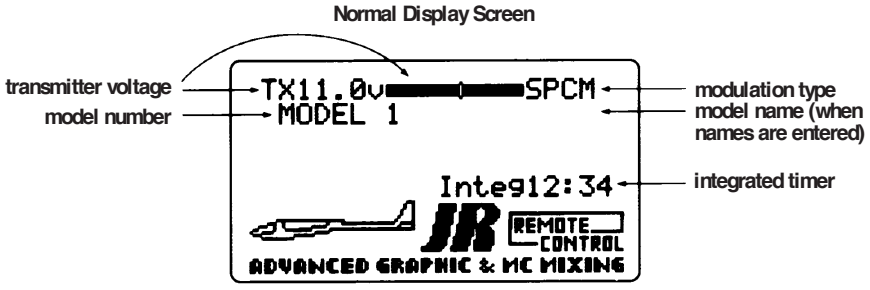

From the Normal Display, the following inputs can be made:

When setting various functions with the buttons shown below, start either in the Function Mode or the System Set-Up Mode.

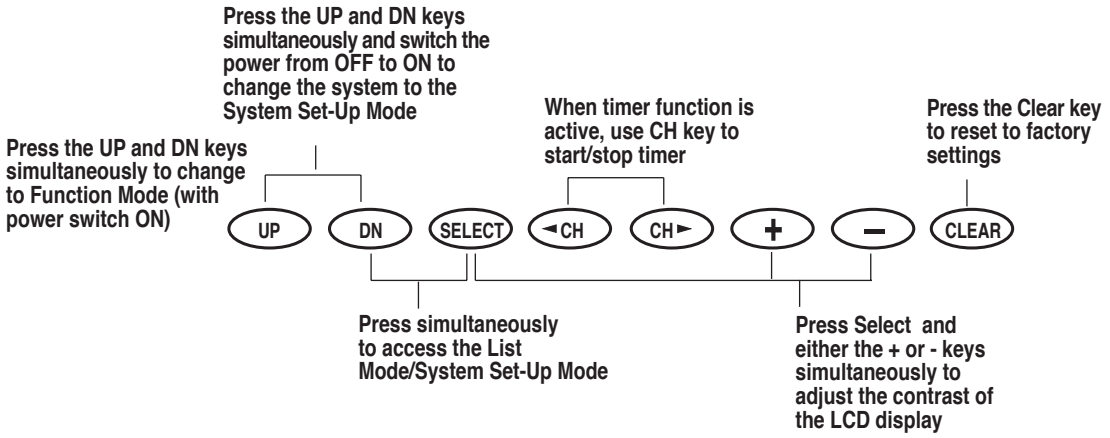

3. System Set-Up Mode Functions

3.1 System Set-Up Mode

To set the System Set-Up Mode, press the UP and DN keys simultaneously and turn the power switch from OFF to ON. Functions are selectable by pressing either the DN or UP keys. Individual settings are explained later at each function. In this mode, servos are not activated, but operating signals are transmitting (only when the Tx module is in place). However, use extra caution not to interfere with other frequencies. By pressing the DN and UP keys simultaneously, you can return to the normal display, which allows the servos to again operate.

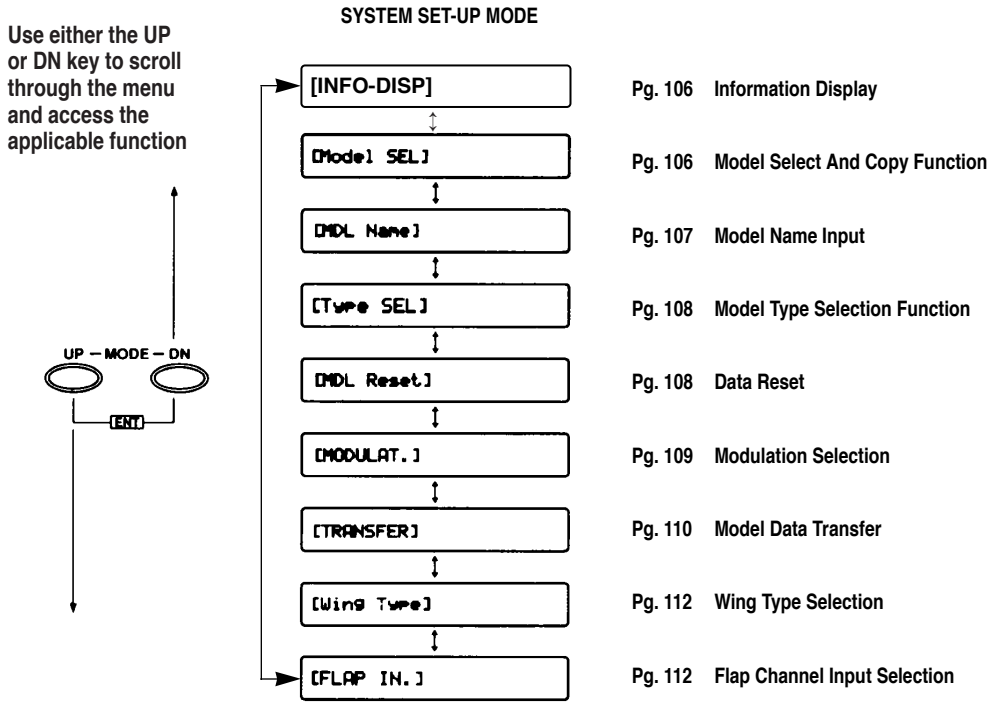

From Normal Display, press the UP and DN keys simultaneously to enter the Function Mode. In this mode, by using the UP or DN keys, the desired functions can be selected. When channel selection or an additional function change is desired, use the CH keys or SEL key. For example, Dual Rate Function is selected and the elevator channel is displayed by pressing the UP key once; the function is changed to the next mode, Reverse Switch, but the channel is still displayed as elevator.

Function Mode Flowchart

Information pertaining to each function is explained on the page number listed next to the function name. Functions will appear on the screen in the same order they are shown on the flow chart below:

Therefore, by scrolling through the program, you can adjust each function related to the elevator channel quickly and easily.

To Access The Function Mode

1. Switch the power switch to the ON (upper) position.
2. Press the UP and DN keys simultaneously.
3. Use either the UP or DN keys to scroll through the menu and access the appropriate function.

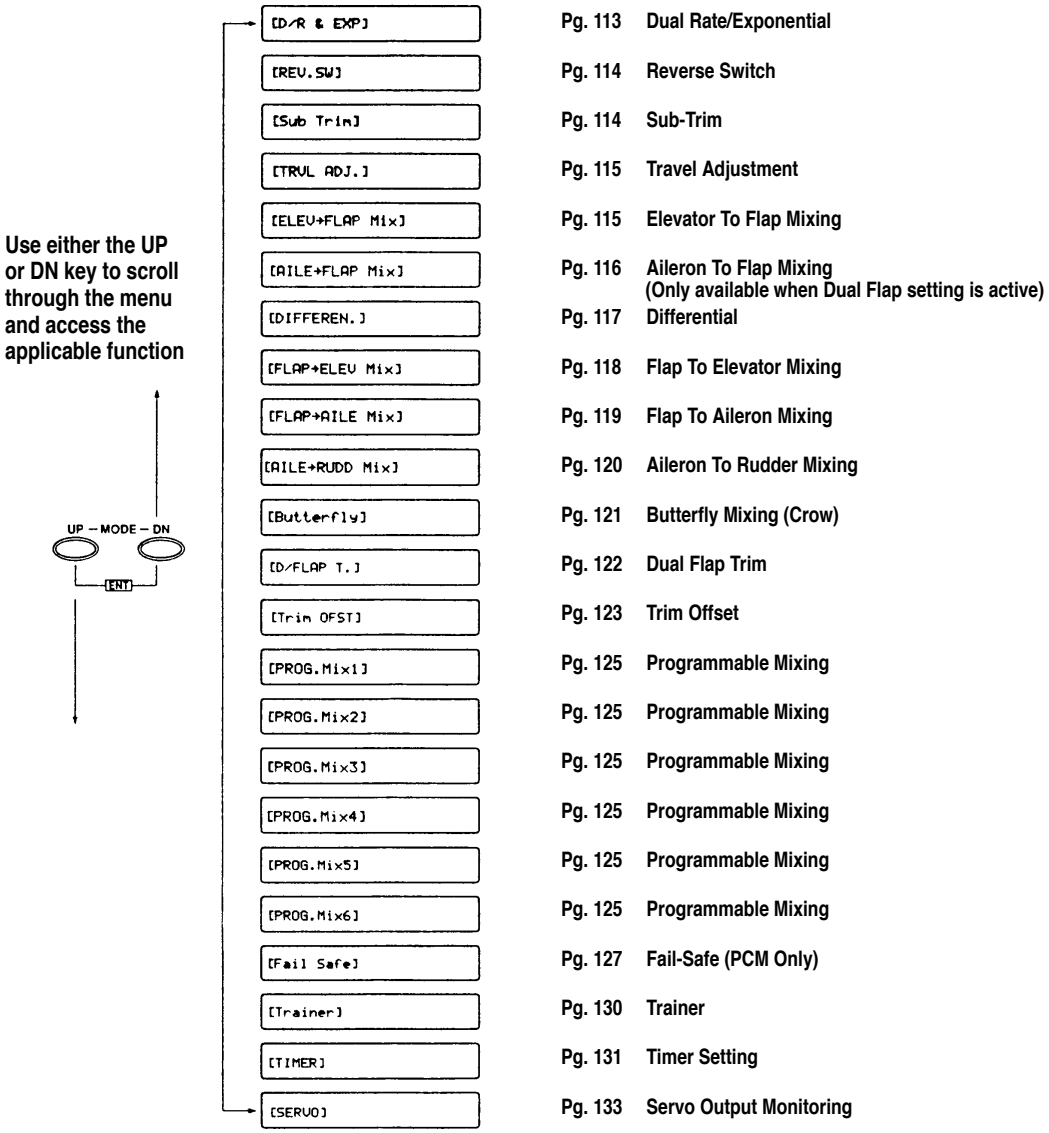

3.3 List Mode (Function Mode)

To enter the List Mode, press the DN and SEL keys simultaneously. From this display, pressing the UP and DN keys simultaneously will move the system from the list mode to the function shown at the cursor. Note that the cursor is moved by the UP and DN keys.

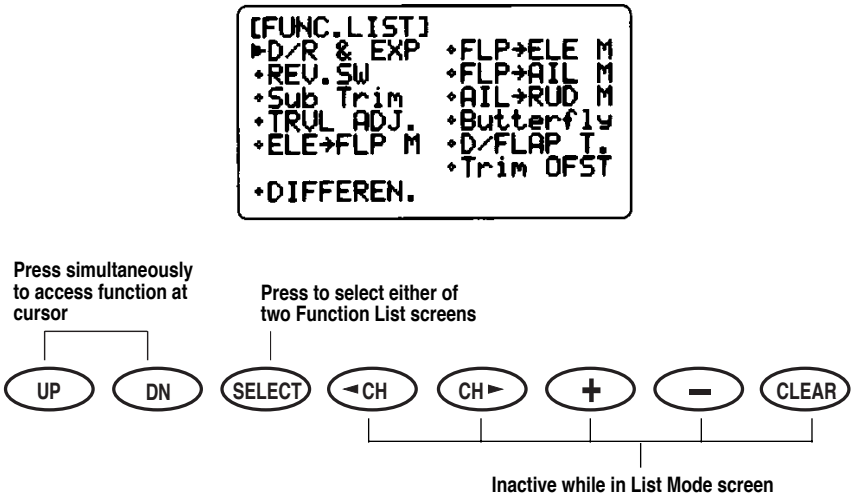

3.4 Model Select (System Set-Up Mode)

The XP8103 transmitter employs a memory function which memorizes data for up to 10 individual aircraft. All settings along with type selection, function, and different aircraft are used by one transmitter. For example, Model 1 is helicopter and Model 2 is airplane. To avoid confusing models, inputing model names for each aircraft is recommended (see page 107). Press the UP and DN keys simultaneously and turn the power switch ON to access the System Set-Up Mode.

The display below shows the model selection function.

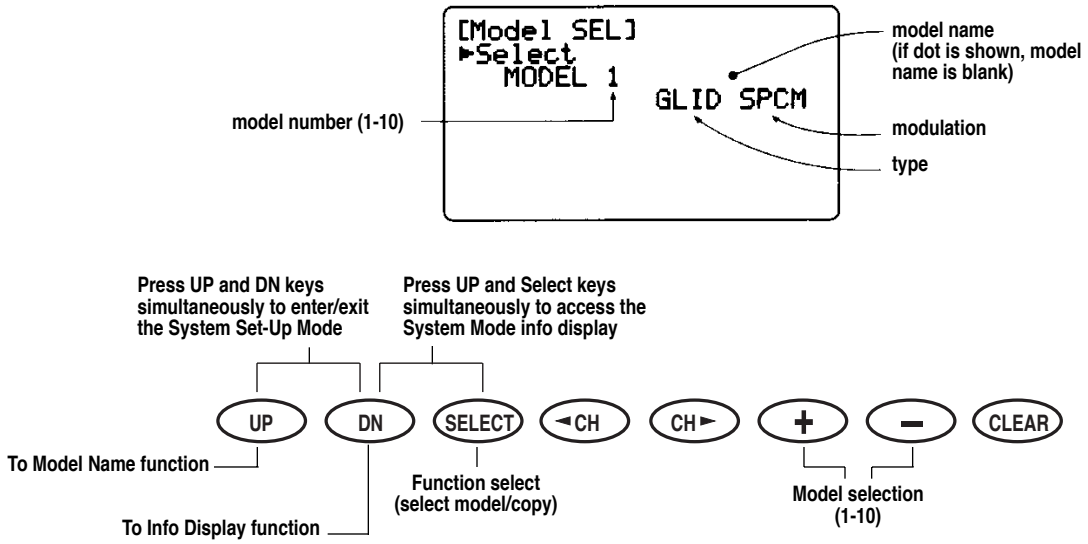

3.5 Copy Select Function (System Set-Up Mode)

The Copy Select Function enables you to copy all of the settings of your current model to another memory (model number) within the same transmitter. This is very useful when setting up one aircraft several different ways.

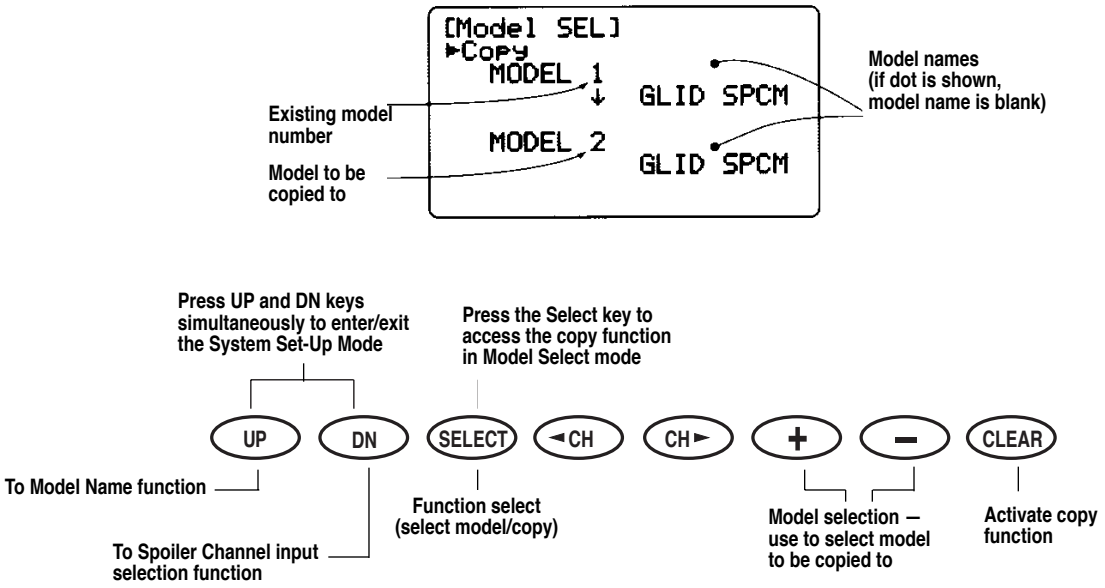

3.6 Model Names (System Set-Up Mode)

This function is used to input model names individually. Each model's name is displayed in the normal screen automatically. when that model is selected. To avoid confusing models, inputing model names is recommended. You can input a maximum of 8 characters for each model name.

In the System Set-Up Mode, select the Model Name function using the UP or DN key. Once selected, simultaneously press the UP and DN keys to access.

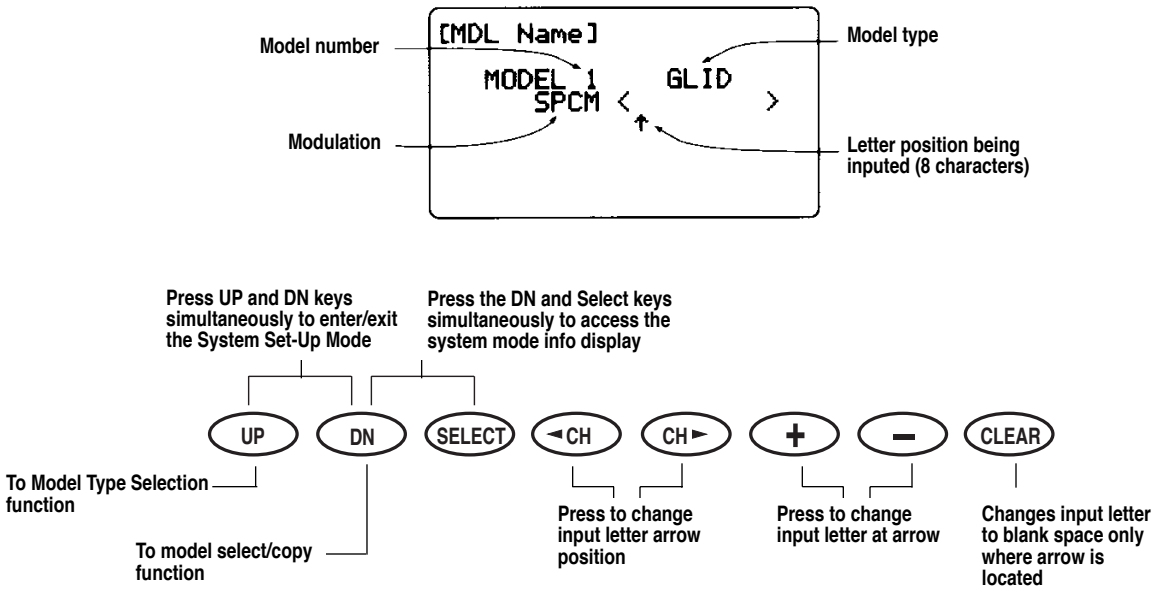

3.7 Model Type Selection (System Set-Up Mode)

The XP8103 is capable of performing as a helicopter, airplane or glider radio with full functions for each.

It can also memorize data for 10 models individually.

Note: If the power switch is turned OFF immediately after selecting the new model type, the change will not be saved. To change and save the model type press the UP or DN keys, or press UP and DN keys or DN and SEL keys simultaneously. At this time, existing model data is replaced by the model type aircraft data selected. Be sure to confirm the model name to prevent accidental loss of your important data. To cancel this function, return to former model type or turn the power switch OFF.

Note: When you select helicopter or airplane model type on this transmitter, allocation of lever switches, etc., will also change. Please refer to the helicopter or airplane section of this instruction manual for their functions.

In System Set-Up Mode, select the Type Select Function and simultaneously press the UP and DN keys to access

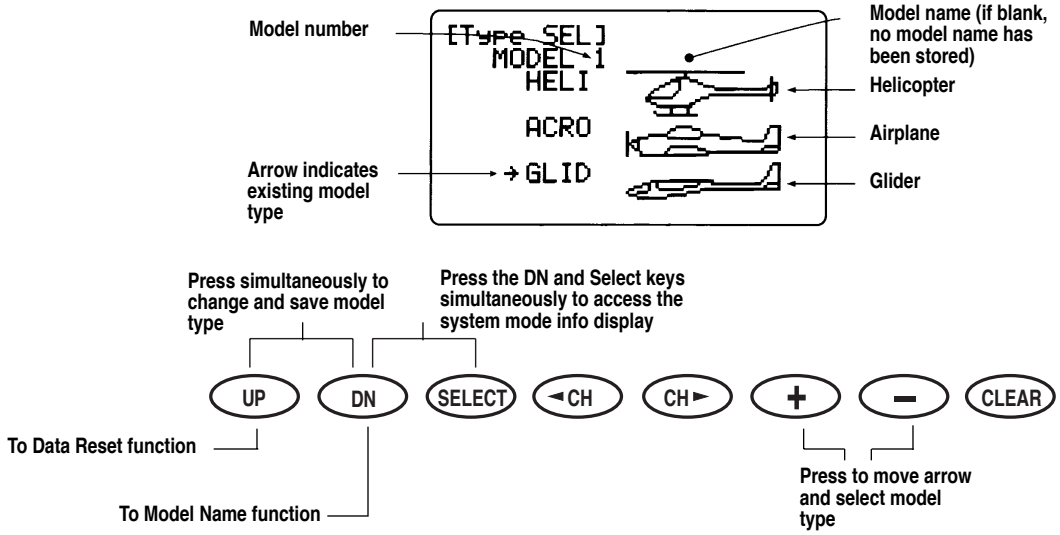

3.8 Data Reset (System Set-Up Mode)

The Data Reset Function allows you to reset all the functions and settings for the current model to the factory pre-set conditions. Resetting does not affect the data already programmed for other models. Be sure to confirm that you need to reset the data of the currently indicated model in order to prevent accidental loss of valuable data.

Note: If a model name has been input and is reset, the model name will not be removed, only the data. Please refer to the Model Name Function for information on how to change the model's name.

To access Data Reset, select Model Reset in System Set-Up and press the UP and DN keys simultanelously.

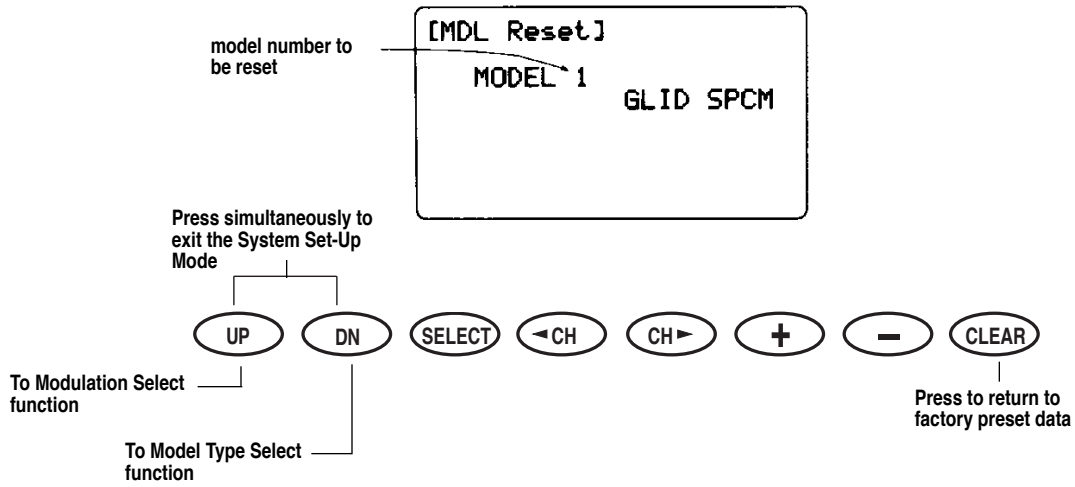

3.9 Modulation Select (System Set-Up Mode)

The Modulation Selection Function enables your XP8103 to transmit to a variety of JR receivers that are already, or may soon be, in existence. You can select from either S-PCM or Z-PCM mode, depending on the Central Processing Unit within your receiver, or from PPM (Pulse Position Modulation—FM). Refer to the receiver compatibility chart for the correct modulation.

Caution: After making modulation changes, you must press either the UP and DN, or the DN and SEL keys simultaneously to accept the new modulation type. If the Tx power switch is turned OFF before this procedure, the modulation change will not be saved.

Receiver Compatibility Chart

Tx Modulation	Compatible Receivers	# of Channels & Brief Description
PPM (FM)	NER226	6 (micro)
PPM (FM)	NER228	8
PPM (FM)	NER327x	7
PPM (FM)	NER527x	7 (micro)
PPM (FM)	NER529x	9 (micro)
PPM (FM)	NER549	9
PPM (FM)	NER600	6 (micro)

Tx Modulation	Compatible Receivers	# of Channels & Brief Description
Z-PCM	NER-236	6 (micro)
Z-PCM	NER-627XZ or 627 "G" series	7
Z-PCM	NER-J829P	9
Z-PCM	NER-910XZ	10
S-PCM	NER-D940S	10
S-PCM	NER-649S	9

In system Set-Up Mode, select Modulation Select using the UP and DN keys and press the UP and DN keys simultaneously to access.

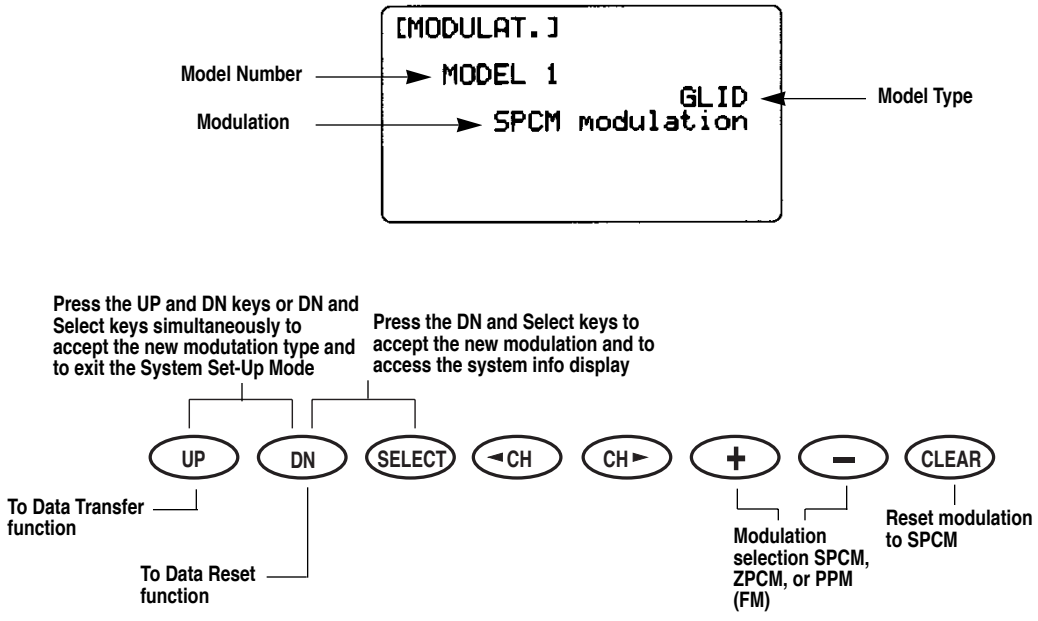

3.10 Data Transfer (System Set-Up Mode)

This function is used to transfer all existing memorized data for a model from one XP8103 transmitter to another XP8103 transmitter.

Use the + and - keys to select models to be transferred and activate by pressing the CLR key.

To avoid the loss of important data, re-confirm model names when transferring.

Caution: Please use special caution when copy function is activated as existing data is replaced with new data.

Caution: When the battery alarm is activated (battery low), the copy function is not operational.

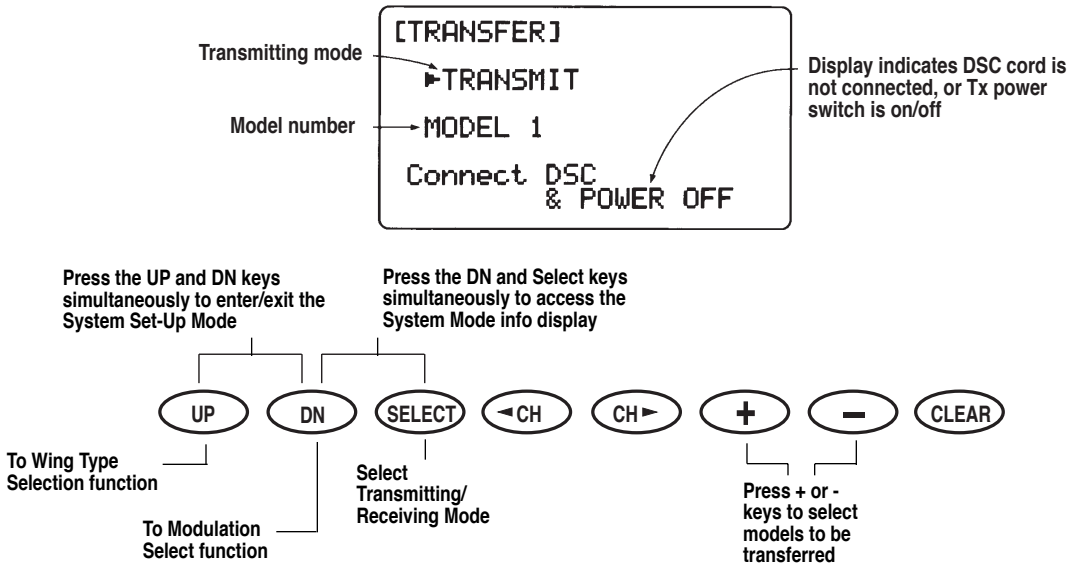

Transfer Procedure

1. Select the model number to be transferred (transmitting mode side) through the Model Select Function. (See page 106 for information on Model Select Function.)

2. Both transmitters: With the power switches OFF, press the UP and DN keys simultaneously while inserting the trainer cord into the DSC jacks of both transmitters.

3. Both transmitters: Select the Transfer Fuction by pressing the UP or DN key. Then simultaneously press the UP and DN keys to enter the Transfer Function.

4. Receiving mode transmitter (Tx to be programmed): Press the Select key until the screen reads "Receive." Select the receiving model number by pressing the + or - keys. Next, press the CLR key to activate the receiving stand-by mode.

5. Transmitting mode transmitter (Tx with program to be transferred): Press the CLR key to start transmitting data. Both transmitters will indicate [End ok!] display when the transmitting is complete.

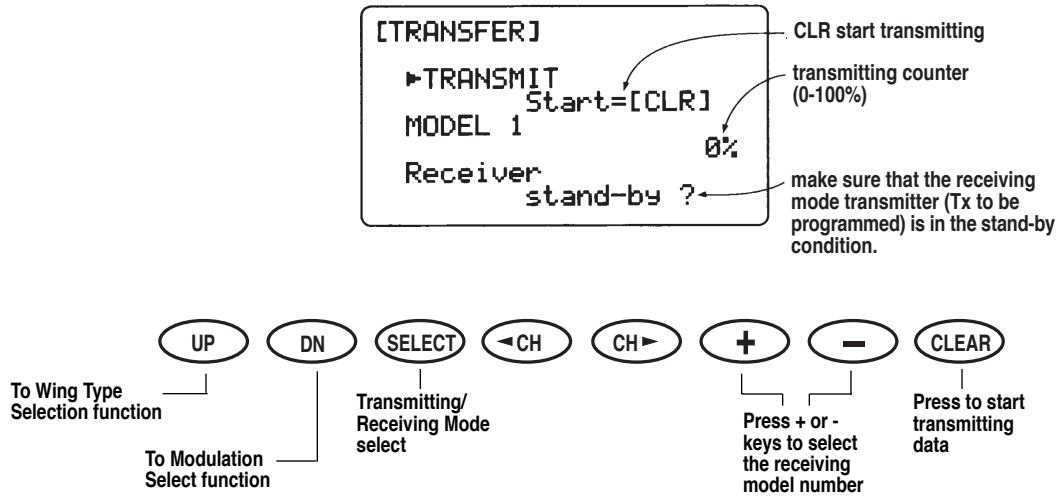

When there is a data receiving failure during transmitting, the counter will stop. At this time, press the CLR key to stop the receiving condition. Check to be sure the receiving counter is operating normally and ended with 100%. If there is any failure of transferring, the display will appear as follows:

ERROR Tx mismatch

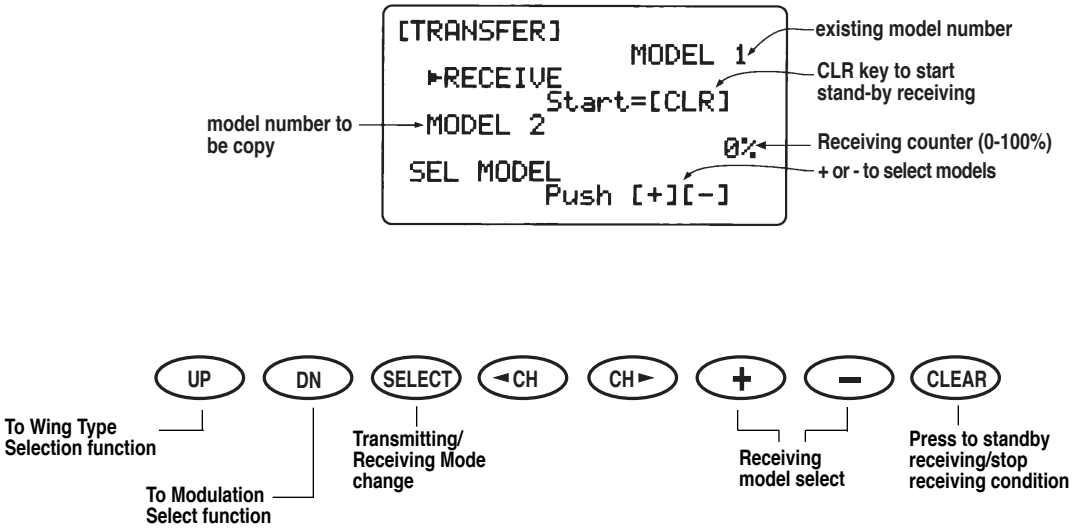

When the receiving counter is stopped or you see ERROR indicated, check the DSC cord connections or trainer cord conditions and try again. When data has been received correctly, you will see [End ok!] display. Be sure that the receiving mode transmitter is in stand-by condition first. Then on the transmitting transmitter press the CLR key to start transmitting.

Also ensure that when transferring is complete, previous data stored in the receiving side transmitter is replaced by the new data transferred.

Note: This function does not work when the battery alarm is flashing (low battery).

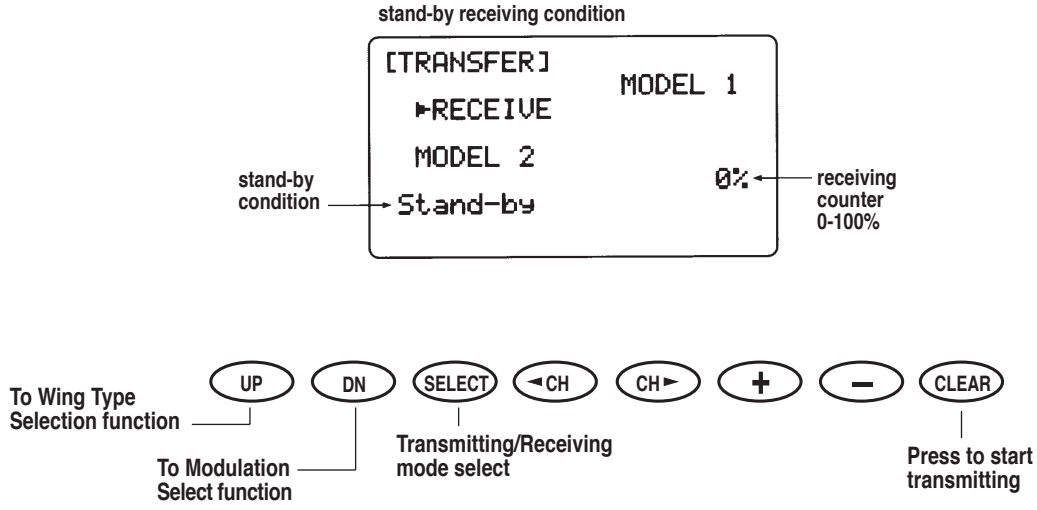

3.11 Wing Type Selection (System Set-Up Mode)

Use of V-Tail

Connect the left moveable tail surfaces to the servo connected to ELEV and the right moveable tail surfaces to the servo connected to RUDD. At this time, the servo's operational value is automatically set for 75%. An applicable channel's servo travel is individually adjusted by each servo's dual rate settings. Servo reversing is also set individually. Neutral adjustment should be made individually using the Sub-Trim Adjustment Function.

Use of Dual Flap

Connect the left flap to channel 6 (FLAP) and the right flap to the servo connected to channel 7 (AUX2) of the receiver. At this time, the Aileron to Flap Mixing Function is available for setting, and by using the POT (dual flap aileron trim knob), both flaps are operational as trim for aileron operations.

Applicable channel's servo travel and reversing switches neutral adjustment should be made individually using the Sub-Trim Adjustment Function. This setting is very useful and allows the left and right ailerons and both flaps to operate as flaps or ailerons.

Connect the right aileron to channel 5 (AUX2); the left flap is connected to channel 6 (FLAP), the left aileron to channel 2 (AILE), and the right flap is servo connected to channel 7 (AUX2).

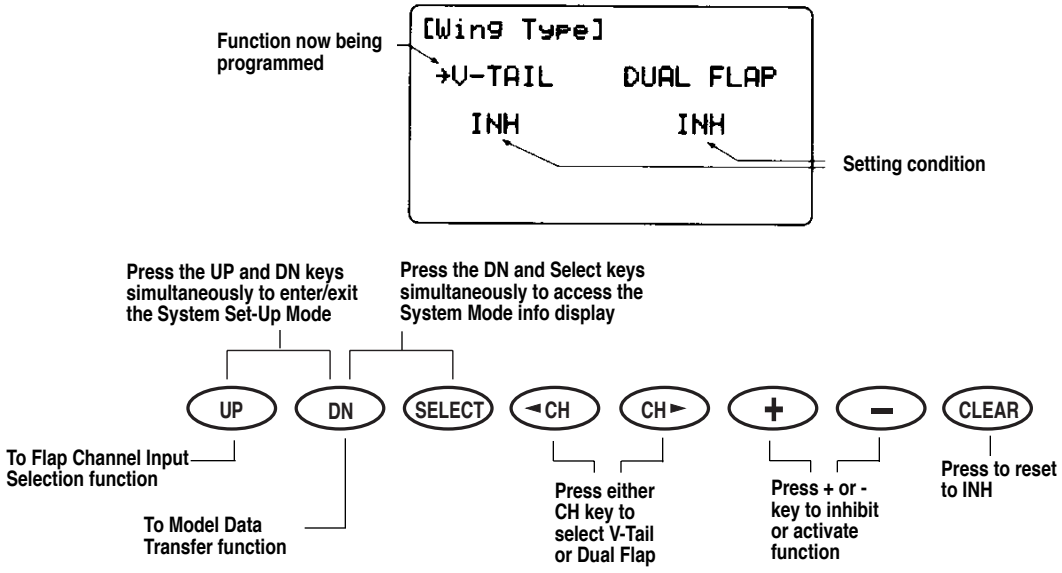

3.12 Input Selection (System Set-Up Mode)

At this time, activate dual flaps using the Flap Channel Input Selection for FLP.SW + P6 (flap switch and flap POT set for trim operations).

The following mixes are now available:

- flap to elevator mixing
- flap to aileron mixing
- aileron to flap mixing
- butterfly mixing

FLAP (6-ch) and AUX2 (7-ch) servo travel can be adjusted by Channel 7's travel adjust operational value.

Trim adjustment for each control surface can be adjusted by the following POTs: POT-5 for aileron's flap trim, POT-6 for flap's flap trim, POT-7 for flap's aileron trim

Flap channel input is selectable either by flap knob (POT-6) or flap switch. POT-6 also operates as the trim.

Selection is made by pressing either the + or - keys (POT-6 — - FLP.SW + P6). Press the CLR key to preset to POT-6.

- When POT-6 is selected, the servo is 100% operational by the flap knob.
- When FLP.SW + P6 is selected, flap operation is activated with the spoiler stick (throttle stick).
- Flap servo travel adjustment is achieved with Flap Travel Adjustment.

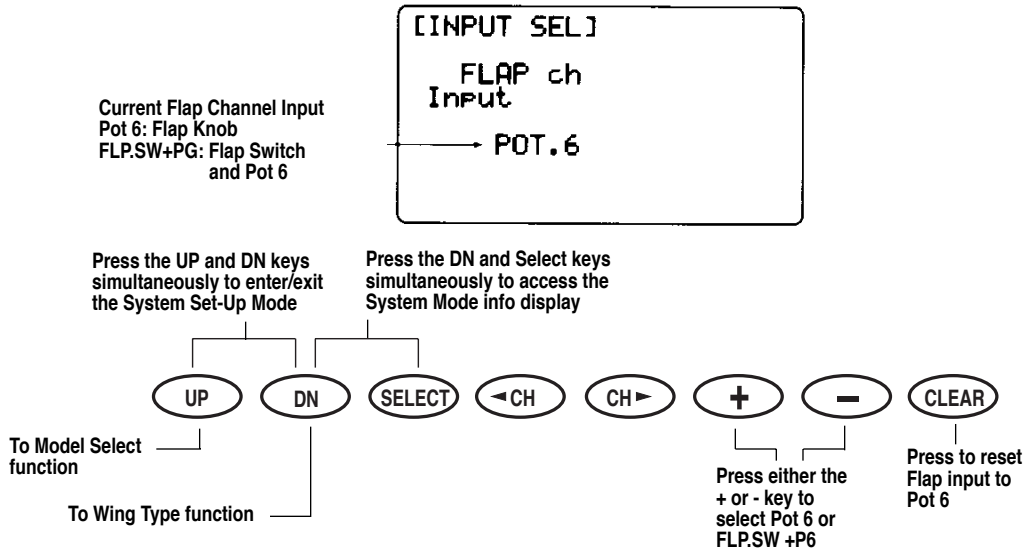

4. Function Mode Functions

4.1 Dual Rate, Exponential (Function Mode)

Dual rates are available for the aileron, elevator and rudder channels of your R/C glider. The amount of travel is adjustable from 0-125%; exponential is adjustable from 0% (LIN) to 100% in 1% increments. The factory setting, or default value, for both the 0 and 1 switch positions is 100%. Either switch position may be selected as the low or high rate by placing the switch in the desired position and adjusting the value accordingly.

Dual rates can be defined as the ability to vary the travel or throw rate of a servo from a switch. Due to differing travel rates, you will find that the sensitivity of the control either increases or decreases accordingly. A higher rate, or travel, yields a higher overall sensitivity. You may find it easier to think of the Dual Rate Function as double-rated or half-rates.

The Dual Rate Function works in conjunction with the Exponential Function to allow you to precisely tailor your control throws.

In Function Mode, use the UP or DN key to select Dual Rate and access by pressing the UP and DN keys simultaneously.

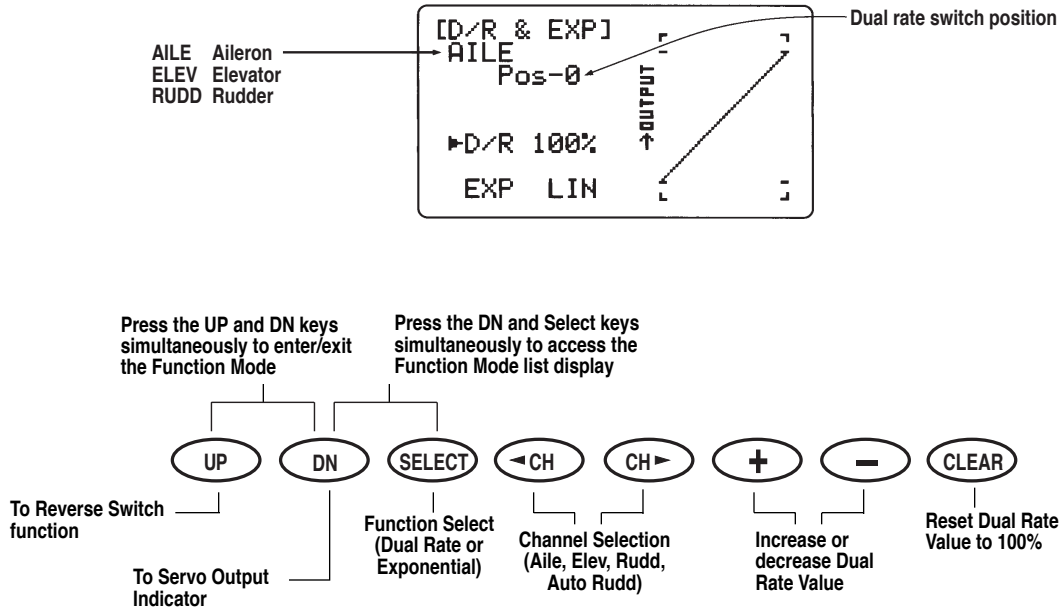

4.2 Reverse Switch (Function Mode)

The Reverse Switch is an electronic means of reversing the throw (direction) of a given channel (servo). All eight channels of the XP8103 offer reversible servo direction. This will ease set-up during servo installation in your aircraft.

In Function Mode, use the UP or DN key to select the Reverse Switch function and access by pressing the UP and DN keys simultaneously.

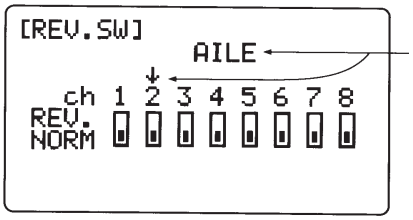

Channel being programmed

SPOI	Spoiler
AIL1	Aileron
ELEV	Elevator
RUDD	Rudder
AIL2	Right Aileron
FLAP	Flap (Left)
AUX2	Flap (Right)
AUX3	Extra Channel (Aux3)

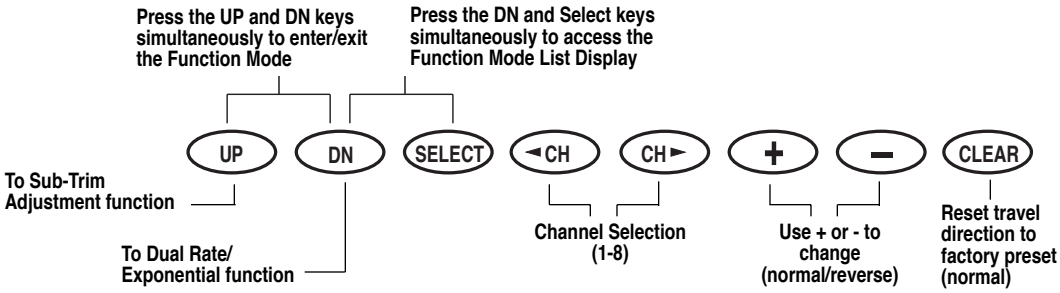

4.3 Sub-Trim Adjustment (Function Mode)

The Sub-Trim Adjustment Function allows you to electronically fine tune the centering of your servos. Individually adjustable for all eight channels, with a range of + or - 125% (+ or - 30 degrees servo travel).

Caution: Do not use excessive sub-trim adjustments as it is possible to overrun your servo's maximum travel.

In Function Mode, use the UP or DN key to select the Sub Trom Adjustment Mixing function and access by pressing the UP and DN keys simultaneously.

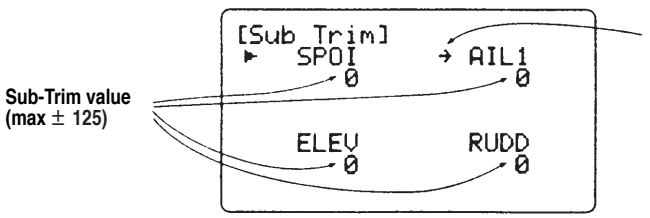

Channel being programmed

SPOI	Spoiler
AILE1	Aileron
ELEV	Elevator
RUDD	Rudder
AILE2	Right Aileron
FLAP	Flap (Left)
AUX2	Flap (Right)
AUX3	Extra channel (Aux3)

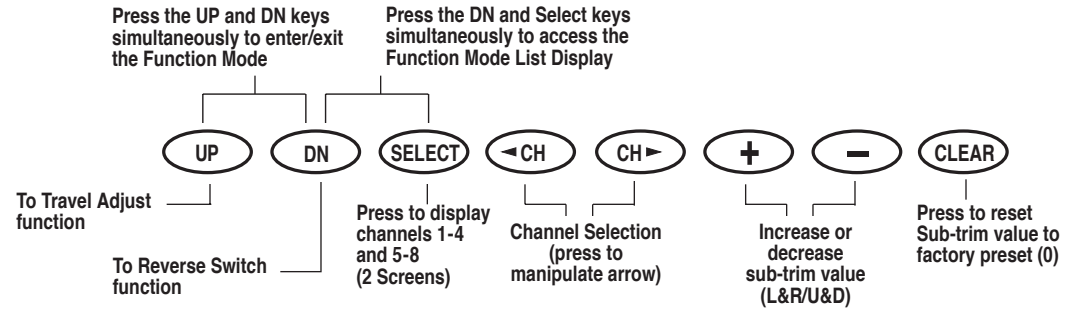

4.4 Travel Adjust (Function Mode)

The purpose of Travel Adjust, also known as endpoint adjustment or adjustable travel volume, is to offer you precise servo control deflection in either direction of servo operation. The travel adjust range is from 0-150% (0 degrees to 60 degrees) from neutral and it can be adjusted for each direction individually. The factory default (data reset) value is 100% for each direction of servo travel.

In the Function Mode, use the UP or DN key to select the Travel Adjust function and access by pressing the UP and DN keys simultaneously.

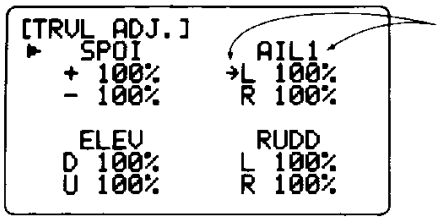

Channel being programmed

SPOI	Spoiler
AIL1	Aileron
ELEV	Elevator
RUDD	Rudder
AIL2	Right Aileron
FLAP	Flap (Left)
AUX2	Flap (Right)
AUX3	Extra channel (Aux3)

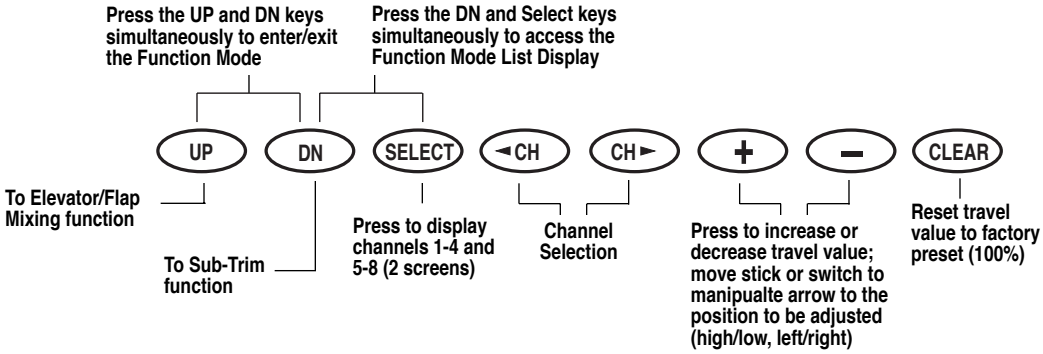

4.5 Elevator To Flap Mixing (Function Mode)

When the Elevator to Flap Mixing Function is activated and a value of flaps is input, the flaps will be deflected each time the elevator stick is used. The actual flap movement is independently adjustable for both up and down elevator. The most frequently used application is up elevator/ down flaps. When used in this manner, the aircraft pitches up much more quickly than normal — helpful in tight thermal turns.

In Function Mode, use the UP and DN keys to select Elevator to Flap Mixing function and access by pressing the UP and DN keys simultaneously.

Selection of Operational Switch

Elevator to flap mixing can be turned ON / OFF with a variety of switches and switch positions. Below is a list of the switch options. **Note:** When applicable switch is OFF, SW OFF flashes in the left upper corner and increase or decrease mixing value is not applicable.

MIX	Mixing Switch Is Forward
FLPD	Flap Switch Down Position
FLPU	Flap Switch Up Position
ON	Always On

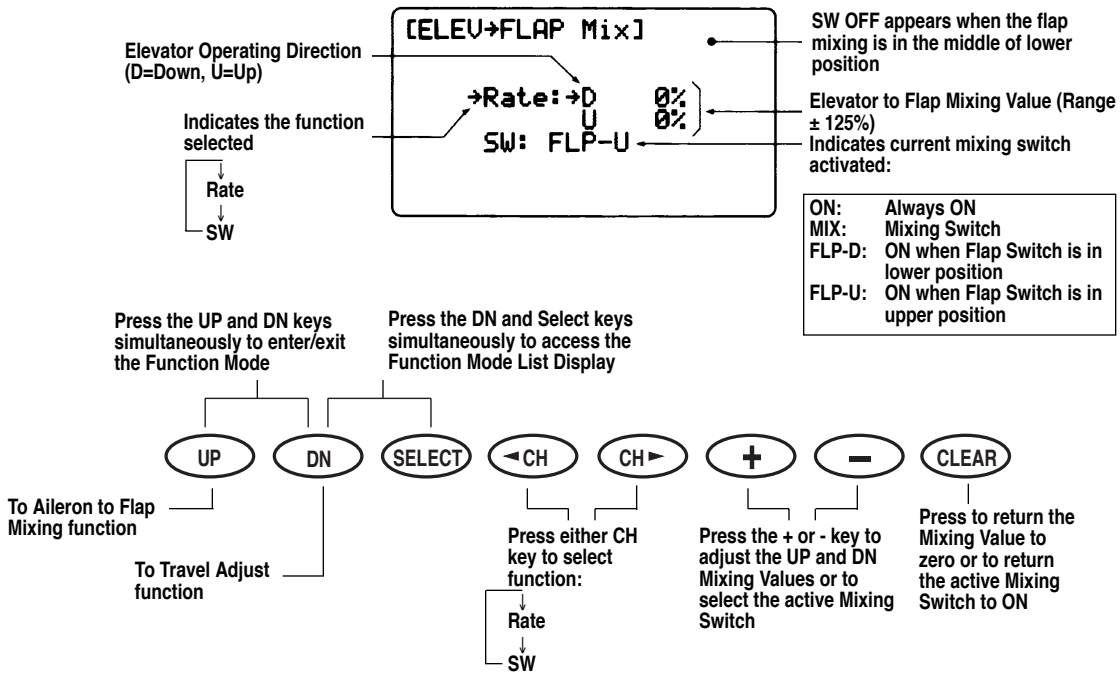

4.6 Aileron to Flap Mixing (Function Mode)

The Aileron to Flap Mixing Function is only applicable when the Dual Flap Function is activated in the Model Set-Up Mode. For information on how to activate the Dual Flap Function, refer to the Wing Type Selection Function.

The purpose of this mixing function is to mix the ailerons with the flaps so the the flaps will operate in conjunction with the ailerons. In effect, this will increase the amount of aileron control surface area available. The amount of mix is adjustable; thus you can tailor the aileron response to fit your flying style. The knob on the upper left corner of the XP8103 transmitter will trim the flaps as ailerons. This knob will trim the flaps as ailerons. The aileron ratchet trim has no effect on the flaps.

In Function Mode, use the UP and DN keys to select Aileron to Flap Mixing and access by pressing the UP and DN keys simultaneously.

Note: If differential mixing is being used, the flaps will also operate differently according to the value input in the differential mixing.

Selection of Operational Switch

Switches for these mixing functions are listed below and can be accessed with the + or - keys. When applicable switch is in the OFF position, SW OFF flashes and increase or decrease mixing value is not applicable. Press the Clear key to set ON.

ON	Always On
MIX	Mixing Switch is Forward
FLP - D	Flap Switch Down Position
F - U&D	Flap Switch Up or Down Position

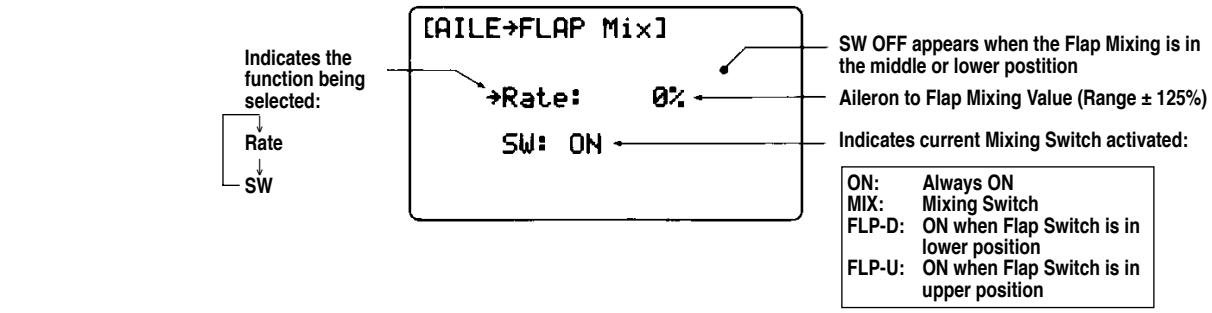

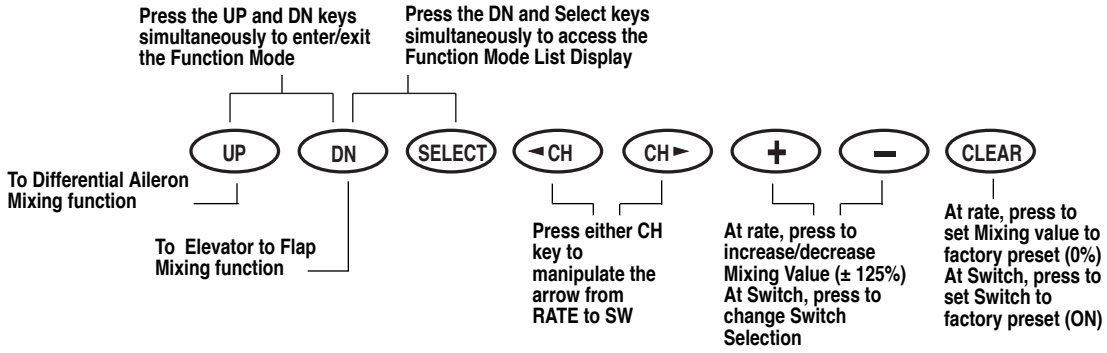

4.7 Differential Aileron Mixing (Function Mode)

The XP8103 transmitter offers aileron differential. Differential ailerons are used to tailor the flight control system to a particular aircraft. Because the downward travel of the aileron creates more drag than the upward travel, it is necessary to reduce the amount of down travel for each aileron. This drag may very well produce an adverse yawing tendency in your aircraft. As adverse yaw is undesirable in most, if not all, R/C aircraft, it is best to correct for this common flight tendency. Aileron differential overcomes this yaw as it reduces the downward travel of the ailerons.

In Function Mode, use the UP and DN keys to select Differential Aileron Mixing and access by pressing the UP and DN keys simultaneously.

Note: Differential may also be obtained by using the travel adjust.

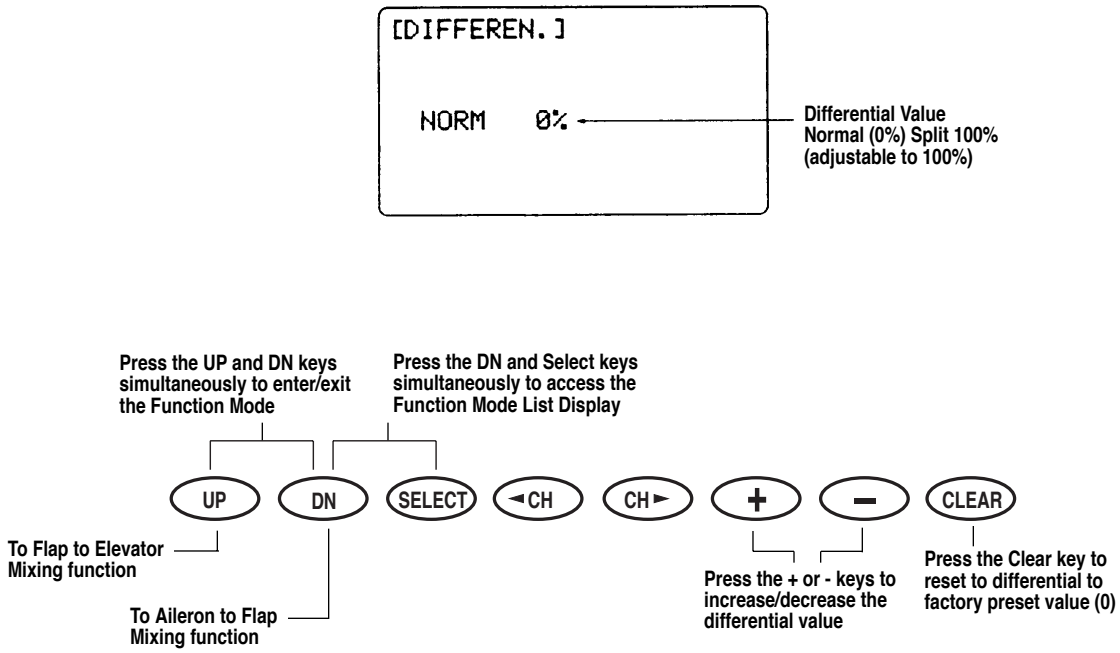

4.8 Flap to Elevator Mixing (Function Mode)

When the Flap to Elevator Mixing Function is active and a value for elevator is input, the elevator will be deflected accordingly each time the flaps are used. The actual elevator movement is adjustable for both up and down flaps. Thus, the elevator is used to eliminating pitching tendencies when the flaps are raised or lowered. This function also includes a mixing offset to re-define the neutral position of the elevator channel. The effect of the offset is to change the point at which the mixing actually begins.

In Function Mode, use the UP and DN keys to select Flap to Elevator Mixing and access by pressing the UP and DN keys simultaneously.

Selection of Operation Switch

The switches for Mixing Function ON/ OFF and 0 position are listed below and can be accessed with the + or - keys. When the applicable switch is in the OFF position, the SW OFF display flashes in the left upper corner and increase or decrease mixing value is not applicable. Press the CLR key to set ON.

ON	Always On
MIX	Mixing Switch is Forward
FLP - D	Flap Switch Down Position
F - U&D	Flap Switch Up or Down Position

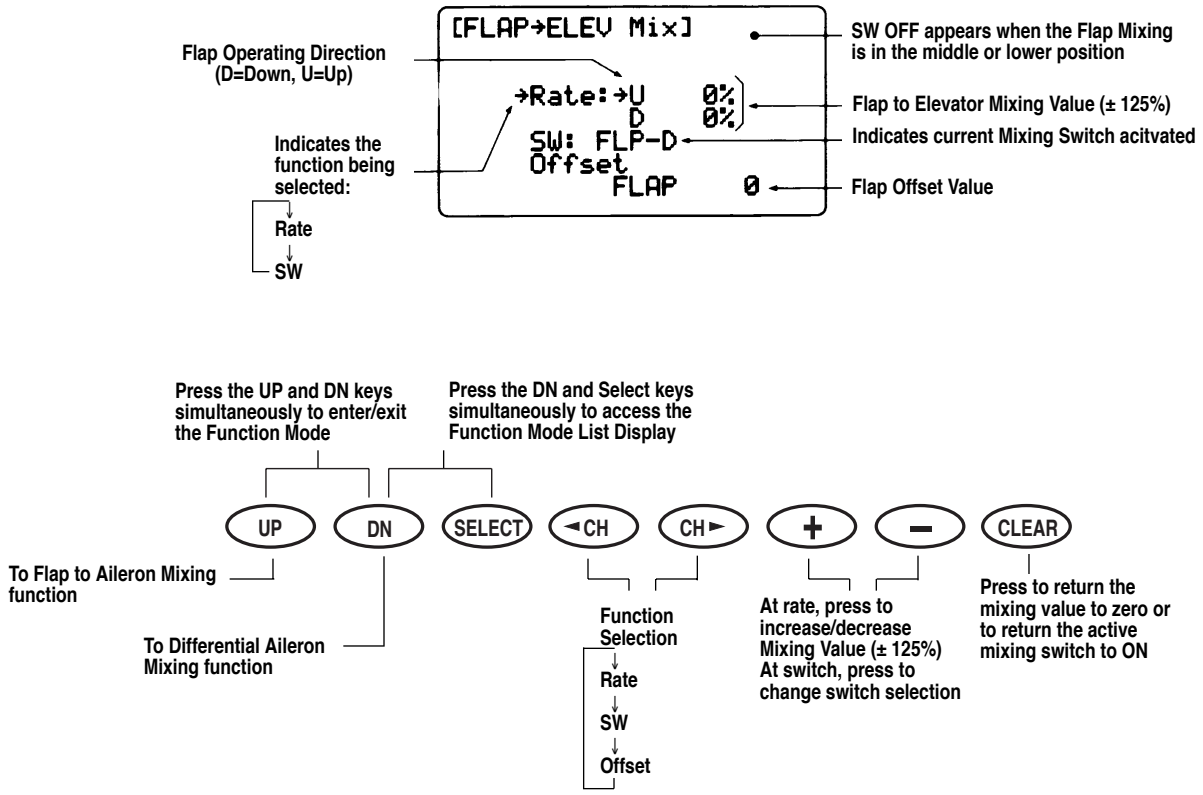

4.9 Flap to Aileron Mixing (Function Mode)

The purpose of the Flap to Aileron Mixing Function is to allow you to couple the ailerons to the flaps. This will enable you to droop the aileron with the flaps to increase lift. If you should find it necessary to redefine the neutral position of the ailerons, a mixing offset is also provided. Note that the offset value for the Flap to Aileron Mixing Function is also the same as the point established for the flap to elevator mix, if utilized. When you need the mix direction reversed, press the - key to increase minus mixing.

In Function Mode, use the UP and DN keys to select Flap to Aileron Mixing and access by pressing the UP and DN keys simultaneously.

Selection of Operational Switch

Switches for Mixing Function ON / OFF position are listed in the chart at right and can be accessed with the + or - keys. When the applicable switch is in the OFF position, SW OFF flashes in the left upper corner and increase or decrease mixing value is not applicable. Press the CLR key to set ON.

Note that the offset value set by this function is the same as flap to elevator mixing.

ON	Always On
MIX	Mixing Switch Is Forward
FLP-D	Flap Switch is Down Position
FU&D	Flap Switch is Up or Down Position

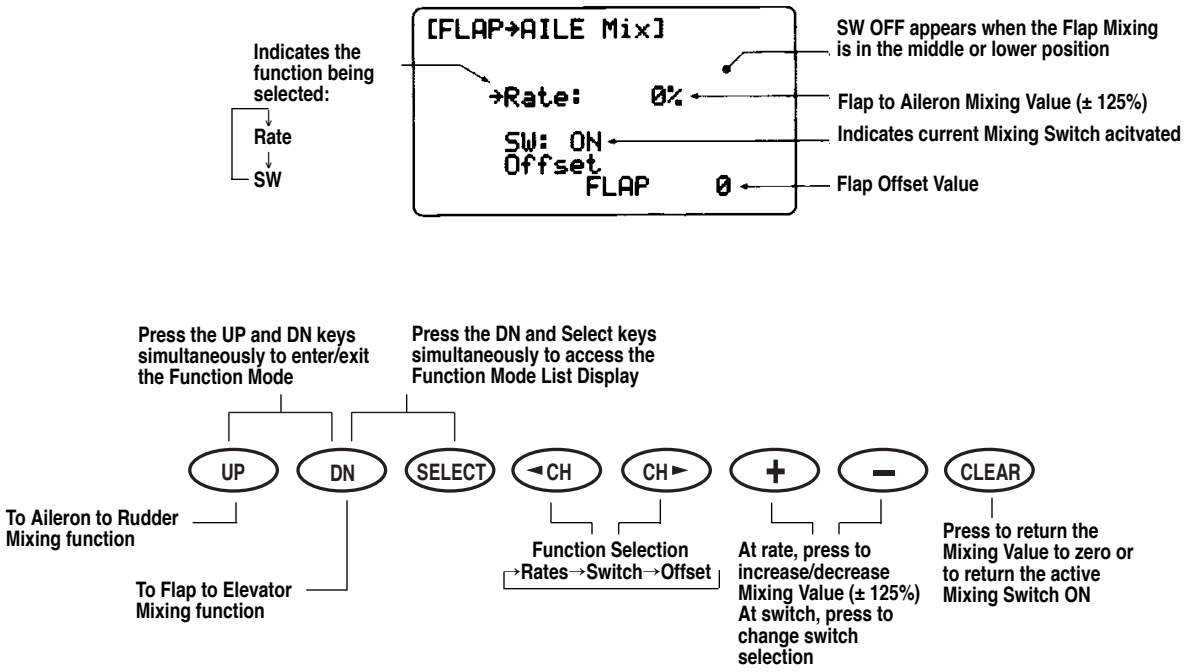

4.10 Aileron to Rudder Mixing (Function Mode)

This mixing gives rudder actuation with aileron operation. When opposite mixing direction is required, press the - key and increase the mixing value to minus direction.

In Function Mode, use the UP and DN keys to select Aileron to Rudder Mixing and access by pressing the UP and DN keys simultaneously.

Selection of Operational Switch

The lever switch position for Mixing Function ON / OFF is listed at right and can be accessed with the + or - keys. When the applicable switch is in the OFF position, SW OFF flashes in the left upper corner and increase or decrease mixing value is not applicable. Press the CLR key to set ON.

ON	Always On
MIX	Mixing Switch Is Forward
FLPD	Flap Switch Down Position
FLPU	Flap Switch Up Position

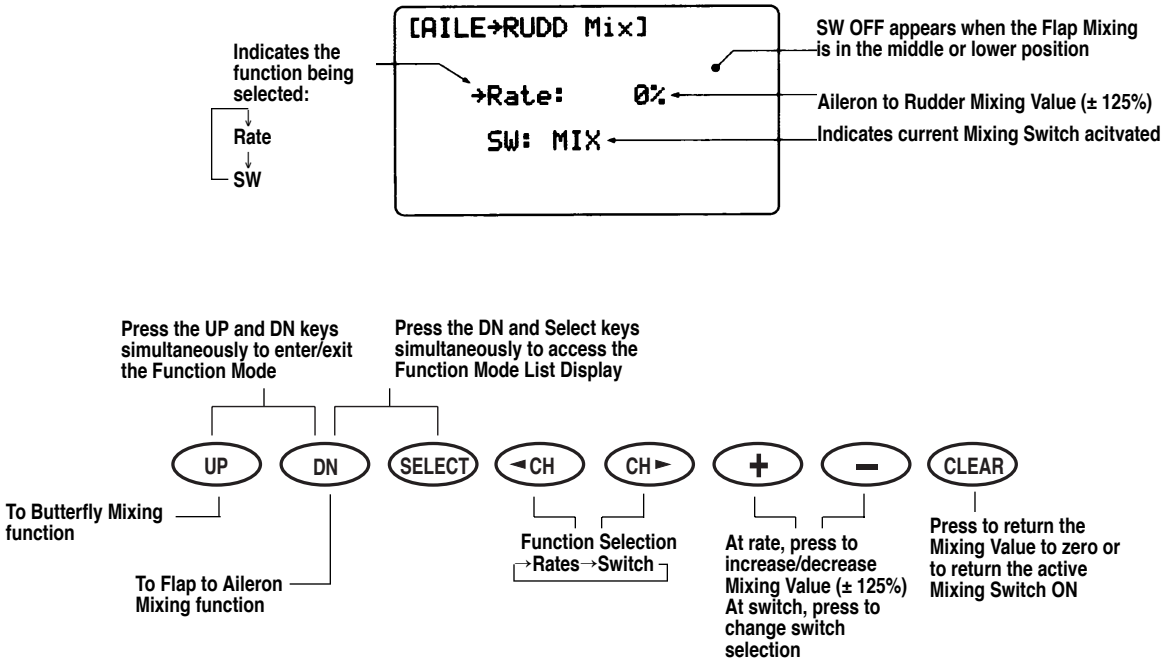

4.11 Butterfly Mixing (Crow) (Function Mode)

The purpose of this mixing is to allow the spoiler stick (throttle stick) to activate the main wing's trailing edge and activate brake operation for the glider. To avoid pitching up when flaps are deployed, elevator mixing is employed. Two different landing settings are available.

Note that this mixing is also called Spoileron or Crow.

In Function Mode, use the UP and DN keys to select Butterfly Mixing and access by pressing the UP and DN keys simultaneously.

Setting Mixing Value

The mixing values can be set to two different settings by utilizing the butterfly switch. To reverse the operating direction, press the - key to increase the minus value.

Setting Spoiler Offset

To access spoiler to flap mixing, press the CH key until Spoiler Offset Setting Function is displayed. Place the spoiler stick in the low position and memorize the offset position by pressing the Clear key. Note that spoiler trim operation affects this mixing.

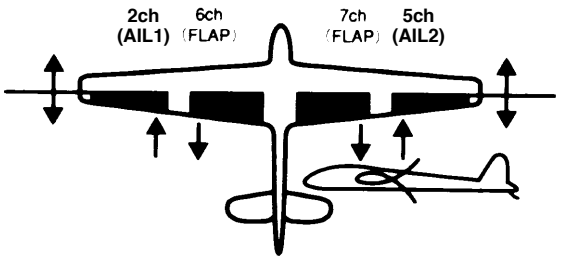

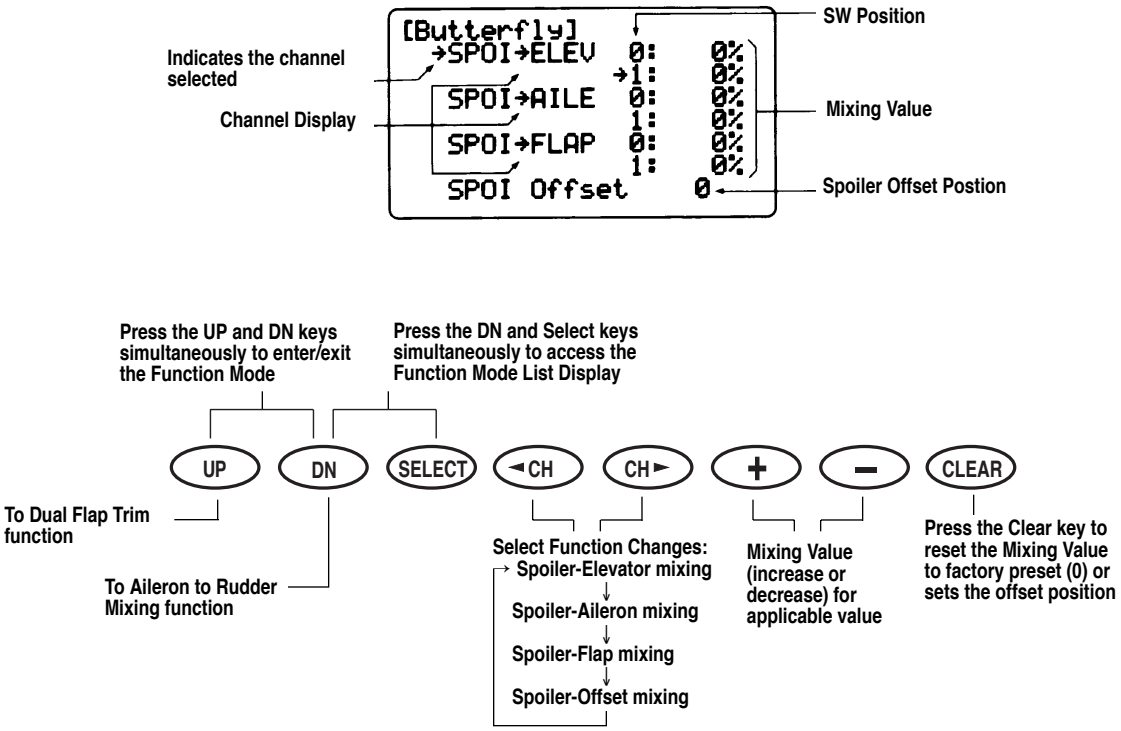

4.12 Dual Flap Trim (Function Mode)

The purpose of the Dual Flap Trim is to allow the trimming of the flap and aileron channels. Three seperate trim POTs are accessible in the Dual Flap Trim Function. POT 5, located on the top right of the transmitter, adjusts both aileron control surfaces up/ down in unison. POT 6, located on the right face of the transmitter, acts as the flap trim of the Dual Flap Trim Function, moving both flaps up/ down simultaneously. POT 7, located on the top left of the transmitter, trims the flaps in opposite directions (as ailerons) **Note:** The Dual Flap Trim Function must be active. Also, the aileron ratchet trim has no effect on the flaps.

In Function Mode, use the UP and DN keys to select Dual Flap Trim Mixing and access by pressing the UP and DN keys simultaneously.

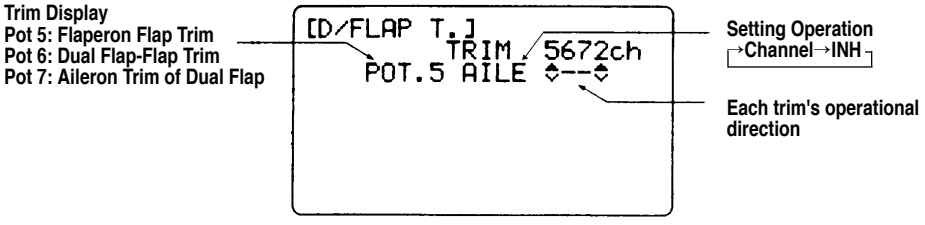

4.12 Dual Flap Trim (Function Mode), cont.

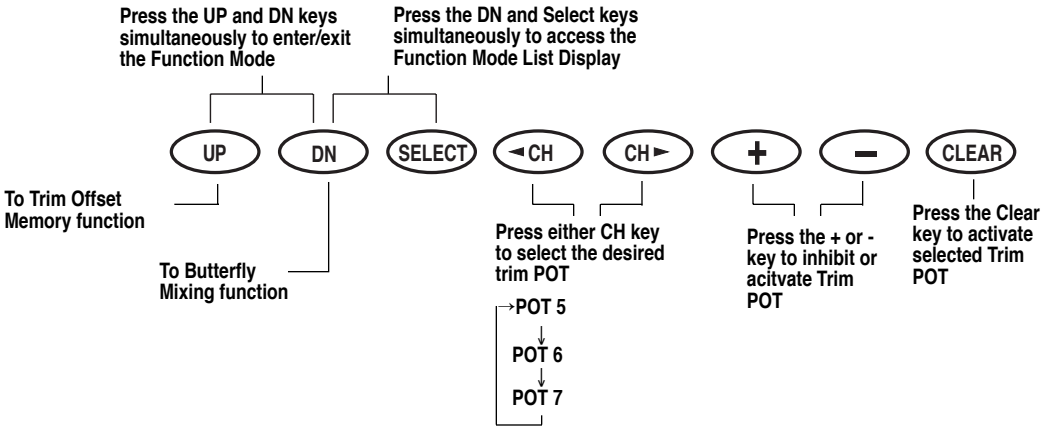

Note: Only POT 5 will appear on the LCD unless the Dual Flap Mixing Function is activated in the Wing Mixing Function. Refer to the Wing Mixing Function for more information on how to activate the Dual Flap Mixing Function.

Note: In order for POT 6 to appear on the LCD, the Switch and Trim (SW+T) Selection must be activated in addition to the Dual Flap Mixing Function. Refer to the Flap Channel Input Selection and Wing Mixing Sections respectively for more information.

4.13 Trim Offset Memory (Function Mode)

The Trim Offset Memory Function allows you to test fly your aircraft and correct for any built-in trim requirements. After you adjust the aileron, elevator and/ or rudder trim levers during test flights, the trim levers are no longer in their center, or neutral, positions. The use of trim offset allows you to return them to their central or neutral positions without readjusting the linkages.

This function is very important when switching from model to model. It allows your trims to remain in their neutral positions. With the use of this function, you can easily switch among the 10 model memories without readjusting for each airplane's trim positions.

In the Function Mode, select Trim Offset Memory using the UP or DN key and access by pressing the UP and DN keys simultaneously.

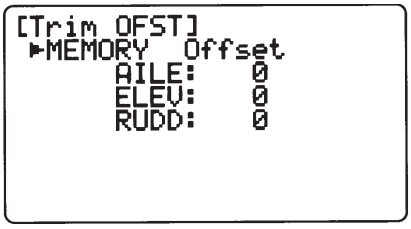

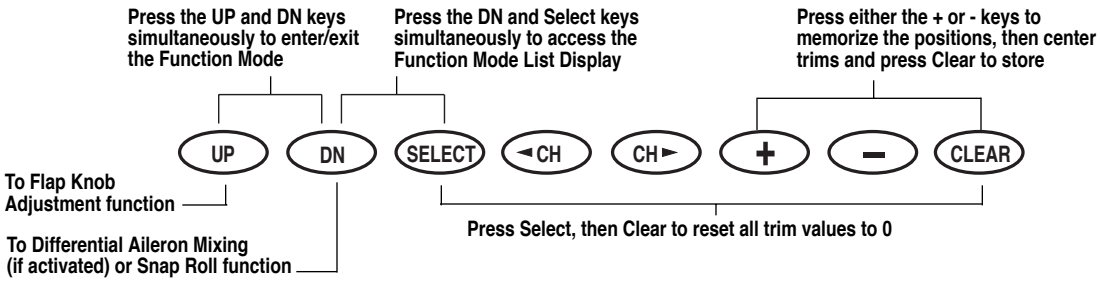

Setting Trim Offset

Example: aileron trim. Trim is offset to left. Access the Trim Offset Function and see Figure 1 below.

At this time, press the + or - keys and the display shows (2) and memorizes the existing position. Next, return trim to center and press the CLR key. Display shows (3) and memorizes the trim offset value and the servo is returned to its first trim position.

Note: If trim is not returned to the center, the trim memory position will not be stored.

Note: If the offset value is too large, a warning will sound when you return the trim levers to center, and the display shown in (4) will appear.

At this time, you should return the applicable trim lever to the corrected position. OVER will disappear from the LCD. It is easy to recognize the applicable trim channel as it will be the one next to where OVER appears on the LCD.

Press the CLR key to clear the trim offsets from the transmitter's memory. It is recommended that you adjust the applicable mechanical linkage accordingly.

To clear the trim offset adjustments, press the Select key and then the CLR key. The display will appear as Figure 5.

To exit from Trim Memory Offset, press the UP and DN keys simultaneously to exit the Trim Memory Offset function.

①
```
[Trim OFST]
 ▶MEMORY  Offset
      AILE:   0
      ELEV:   0
      RUDD:   0
```

②
```
[Trim OFST]
 ▶MEMORY  Offset
      AILE:   0
      ELEV:   0
      RUDD:   0

  Move TRIM to center
         & Push [CLR]
```

③
```
[Trim OFST]
 ▶MEMORY  Offset
      AILE:L 10
      ELEV:   0
      RUDD:   0
```

④
```
[Trim OFST]
 ▶MEMORY  Offset
      AILE:   0  OVER
      ELEV:   0
      RUDD:   0

  Move TRIM to center
         & Push [CLR]
```

⑤
```
[Trim OFST]
 ▶CLEAR   Offset
      AILE:   0
      ELEV:   0
      RUDD:   0

  All clear ?
       Yes=Push [CLR]
```

Accessing the Programable Mixing Functions

Place the transmitter power switch in the ON position. Press the Mode UP and DN keys simultaneously to enter the Function Mode. Press either the UP or DN keys until PROG. Mix 1 appears in the upper left portion of the LCD (refer to figure below).

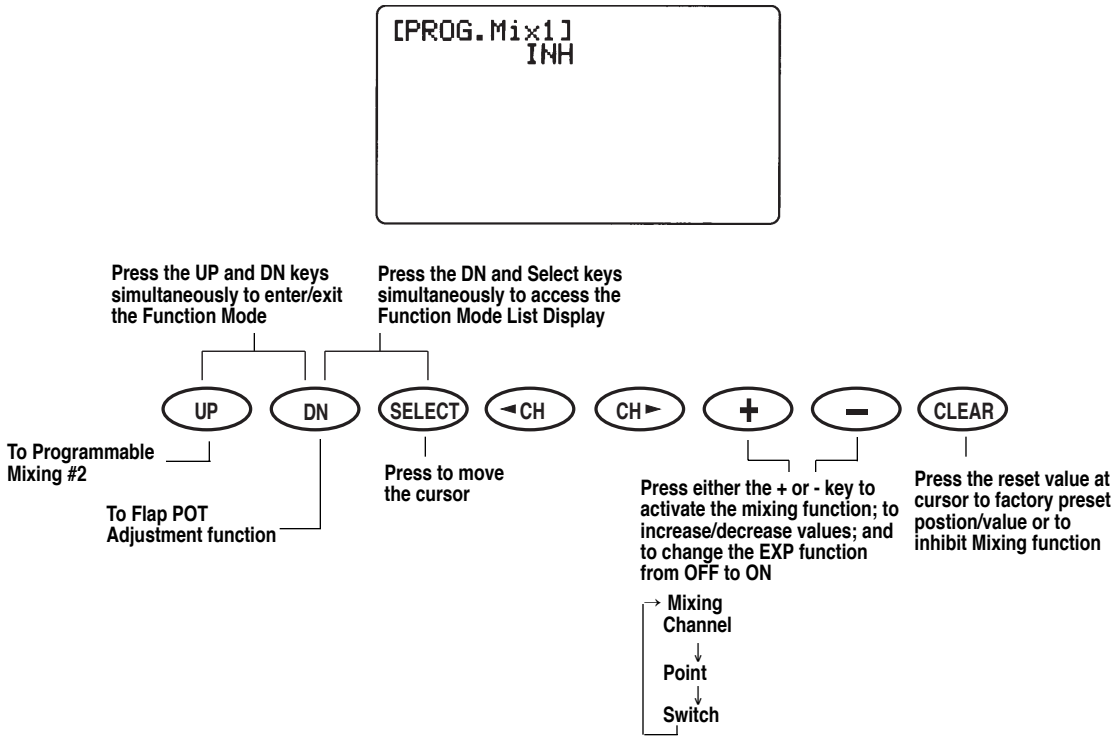

The XP8103 offers six (6) programmable mixes to be used for a number of different purposes. The functions allows mixing any one channel to any other channel.

The mix can remain ON at all times, or be switched OFF in flight using a number of different switches. Refer to Figure 4.13B and 4.13C. Each channel is identified by a four character name (i.e., Aileron - AILE, Elevator - ELEV, etc.). The channel appearing first is known as the "master channel," or the channel to which you want to mix. The second channel is known as the "slave channel," or the channel that is being mixed into the master channel. For example, AILE - RUDD would indicate aileron to rudder mixing — each time the aileron stick is moved, the aileron will deflect, and the rudder will automatically move in the direction and to the value input. Mixing is proportional, so small inputs of the master channel will produce small outputs of the slave channel. Each programmable mix has a mixing "offset." The purpose of the mixing offset is to redefine the neutral position of the slave channel.

Multi-Point Programmable Mixing

Programmable mixes 1 and 2 have the capability for multi-point programmable mixing. The graphic mixing curve, located on the right side of your screen, indicates the mixing curve selected and is a useful reference tool when adjusting or storing points. Up to 5 points can be stored, and these points can be moved independently to any desired servo position from 0 to 100%. (Refer to figure 4.1C).

(4.13B)

Key Display	Switch display Switch lever position for mixing on
ON	Mixing is always ON
MIX	Mixing switch is forward, ON
FLP-D	Flap switch is down position ON
FLP-U	Flap switch is up position ON
BTFY0	Butterfly mixing switch is 0 position ON
BTFY1	Butterfly mixing switch is 1 position ON

(4.13C)

MIX	Mixing Switches available in each programmable mix
1	On → MIX → FLP-D → FLP-G
2	On → MIX → BTFYO → BTFY1
3	On → MIX → BTFYO → BTFY 1
4	On → MIX → FLP-D → FLP-U
5	On → MIX → FLP-D → FLP-U
6	On → MIX → BTFYO → BTFY1

Assigning Channels

Using the SEL key, move the cursor to the left of the master channel. Press the left or right CH keys to position the cursor below the master or slave channel. Press the + or - keys to select the desired channels.

Operating with a Switch

Pressing the SEL key, position the cursor to the side of SW: and using the + or - keys select the desired switch for the particular program mix being used. Refer to figure 4.13B.

Assigning Mixing Values

Position the cursor to the left of "Point" and press the left or right CH keys to reverse the position point. Increase or decrease the mixing value using the + or - keys or the CLR key. When you wish to reverse the mixing direction, press the - key to increase the minus value to the desired position. To activate point 1 or 3 with "INH" displayed, press the + or - key at that position to display mixing value. Press the CLR key if you want to inhibit mixing. Mixing value "0" can be set at points L, 2, and H by pressing the CLR key.

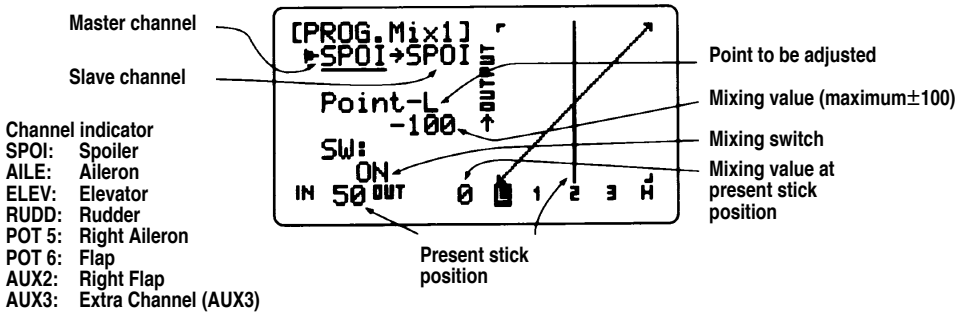

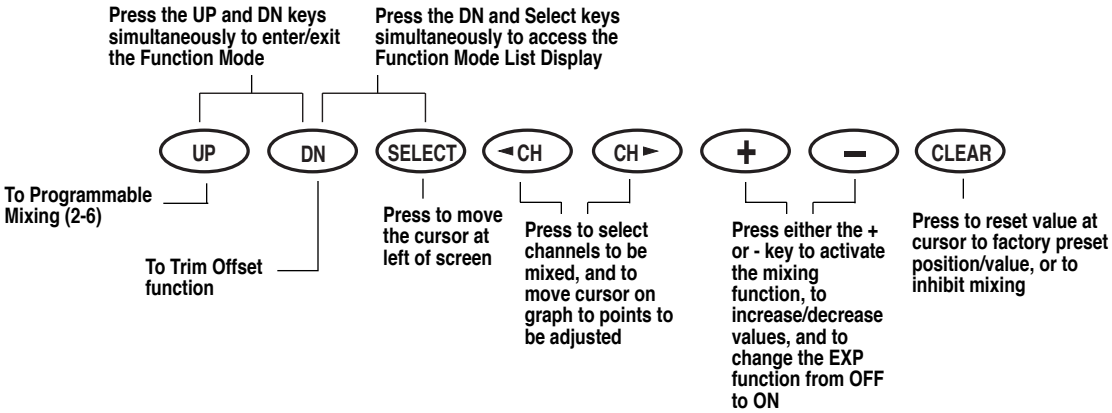

Note about Mixings 1 and 3:

1. When the slave channel is aileron, its mixing operation is effected with preset differential.

2. When the slave channel is flap, its mixing operation is effected to preset flap to aileron mixing (2 steps mixing).

Note about Mixing 2 and 4:

When the master channel is spoiler, its operation is included in spoiler trim operations.

Note about Mixings 5 and 6:

1. When the master channel is aileron, elevator or rudder, the trims are functional for the Master and Slave channels.

2. Mixes 5 and 6 incorporate include mixing.

The Fail-Safe/ Hold Function is available only when you use the XP8103 transmitter in either of the PCM modulations — S-PCM or Z-PCM. This function is designed to help minimize damage to your airplane during a loss of signal to the receiver. The servos either assume the fail-safe presets or hold the last good signal position.

Note: In the PCM modulations, the Fail-Safe/ Hold Function cannot be totally disabled so that the servos will react to interference in the same way as they do in a PPM system. This is only possible with the use of a PPM receiver and the transmitter in the PPM modulation.

Note: Since the actual screen appearance varies, depending on the modulation of your radio, refer to the appropriate modulation section which follows (Z-PCM, S-PCM).

As noted earlier, if you are in the PPM modulation, the Fail-Safe/ Hold Function is not applicable. Therefore, the Fail-Safe/ Hold Function will not appear on your LCD in the PPM mode.

Refer to the Modulation Selection Section for more information pertaining to the broadcast signal of your XP-8103 airplane transmitter.

Accessing the Fail-Safe/Hold Function in Z-PCM Modulation

Hold (Z-PCM)

The Hold Function is automatically activated when the radio is turned ON and is in the Z-PCM modulation.

This function stops (or holds) the servos in the positions they were in just prior to the interference. Therefore, your airplane maintains the position held immediately before the interference was experienced. When a clear signal is restored, the Hold Function releases, and control of the airplane returns to you.

1. Place the transmitter power switch in the ON (upper) position.

2. While the power switch is in the ON position, press the UP and DN keys simultaneously to access the Function Mode.

3. Press either the UP or DN key until Fail-Safe appears in the left portion of your LCD.

Note: If Fail-Safe does not appear on your LCD, it is because you are transmitting in PPM. Fail-Safe is not applicable in the PPM mode. Refer to the Modulation Mode Selection Section for more information.

When the Fail-Safe Function is activated (i.e., when the signal is interrupted), the transmitter automatically moves each servo to a preset position. The position that each servo assumes is determined by you, as is the time length of interference that must occur before servo movement.

After the interference has ceased, control of the airplane returns immediately to you.

There are three time delays to choose from: 1/ 4 (0.25) second, 1/ 2 (0.50) second and 1.0 second. These time delays are the amount of time it takes, starting the moment the interference occurs, until the servos assume their preset positions.

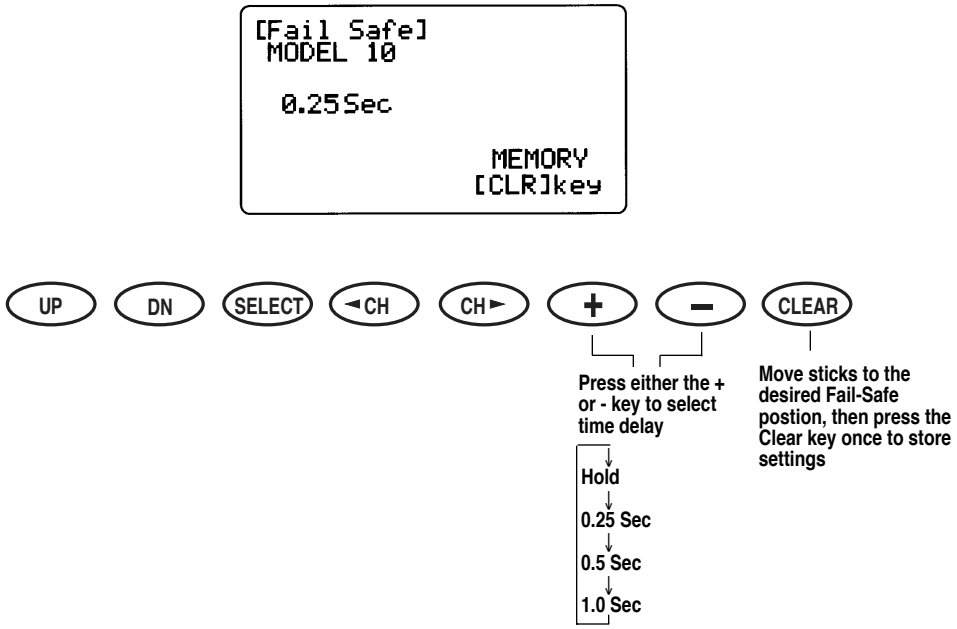

Setting Fail-Safe/Hold Memory in Z-PCM Modulation

1. After accessing the Fail-Safe Function, it is time to adjust the Fail-Safe presets.

2. Select among the three time delays (1/4, 1/2 or 1.0 seconds). To do so, simply press the + or - key until the appropriate delay appears on the screen.

3. Hold the transmitter sticks in the position that you want the servos to assume during signal loss conditions. You can determine fail-safe preset positions for the other channels by placing the potentiometers and switches in the positions that you want them to assume during interference.

4. With the sticks, switches and potentiometers in the fail-safe positions, touch the CLR key. This will enter these locations as the fail-safe memory settings. A high pitched beep will indicate that this setting has been stored.

5. To confirm that the input of data was successful, switch the transmitter OFF. The controls will move to the input locations. If not, repeat step 4 again.

6. To exit the Fail-Safe Function, press the UP and DN keys simultaneously.

Note: These preset positions remain stored in the transmitter's memory until both the transmitter battery pack and the lithium back-up battery have been removed (or until data reset has been performed). Therefore, you do not have to reset the fail-safe each time you fly. Should you want to re-adjust the fail-safe presets, access the Fail-Safe Function and adjust the presets as you have just done. The transmitter automatically recalls the settings for the last fail-safe adjustment.

Accessing the Fail-Safe/Hold Memory in S-PCM Modulation

Hold (S-PCM)

The Hold Function is automatically activated when the radio is turned ON and in the S-PCM modulation.

This function stops (or holds) the servos in the positions they were in just prior to the interference. Therefore, your airplane maintains the position held immediately before the interference was experienced. When a clear signal is restored, the Hold Function releases, and control of the airplane returns to you.

1. Place the transmitter power switch in the ON (upper) position.

2. While the power switch is in the ON position, press the UP and DN keys simultaneously to access the Function Mode.

3. Press either the UP or DN key until Fail-Safe appears in the left portion of your LCD.

Note: If Fail-Safe does not appear on your LCD, it is because you are transmitting in PPM. Fail-Safe is not applicable in the PPM mode. Refer to the Modulation Mode Selection Section for more information.

Fail Safe/Hold Combination in S-PCM Modulation

The XP8103 allows you to combine the hold and fail-safe presets for all eight (8) channels on the receiver — you can select fail-safe or hold independently for all channels on your aircraft. In other words, some channels will hold their last clear signal position, while others assume the preset position. Once the fail-safe has been activated by signal interruption (interference), the transmitter automatically moves the servos to a preset position. The predetermined servo positions are set by you. In the S-PCM fail-safe, the time delay (the amount of time it takes, starting the moment the interference occurs, until the servos assume the preset positions) is fixed at .25, or 1/4, second.

After the interference has ceased, normal operation of the airplane returns to you immediately.

Setting the Fail-Safe/Hold Memory in S-PCM Modulation

1. After accessing the Fail-Safe Function, it is time to adjust the fail-safe presets.

2. Select all of the channels for which you want to enter a fail-safe preset. This is done by pressing the left or right CH key and moving the cursor arrow over the desired channel. Pressing the + or - key will cause the particular channel to assume a "hold" or "preset" fail-safe condition which is determined by positioning the particular control and pressing the CLR key. The transmitter will memorize the switch fail-safe position and automatically transfer the setting to the receiver.

3. Confirmation of proper fail-safe presets/ holds is made by turning the transmitter OFF and observing the aircraft's control functions.

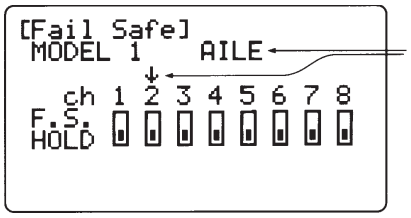

Channels being programmed
SPOI: Spoiler
AIL1: Aileron
ELEV: Elevator
RUDD: Rudder
AIL2: Right Aileron
FLAP: Left Flap
AUX2: Right Flap
AUX3: Extra Channel (AUX3)

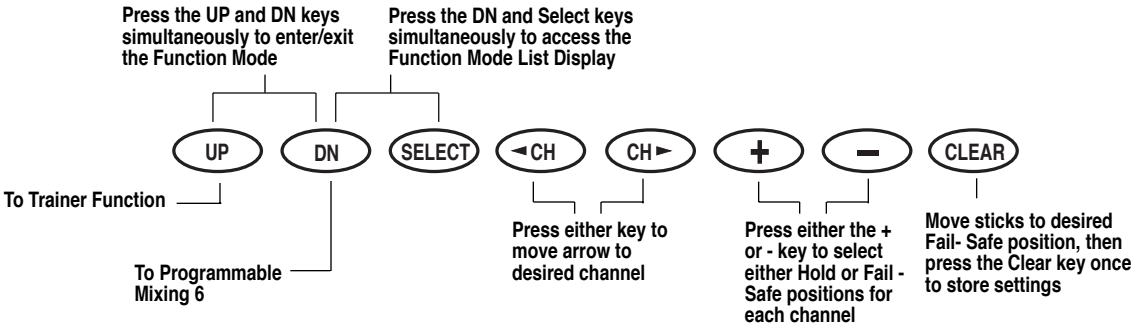

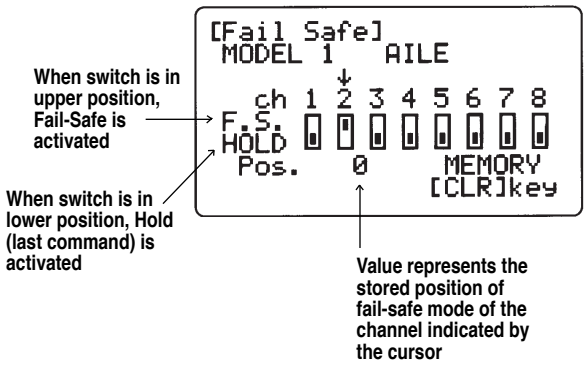

The XP8103 transmitter employs two separate types of trainer systems:

A. Normal trainer system — all functions are controlled by either the master transmitter or the slave transmitter.

B. Programmable function trainer — stick functions may be assigned to the slave one at a time. Since the control functions can be transferred one at a time, students can concentrate on only one function at a time until they are competent to fly solo.

Basic Connections and Limitations

1. The slave transmitter must be PPM (Pulse Position Modulation) with a DSC (direct servo control) jack. If the slave transmitter is PPM/ PCM selectable, select PPM. The master transmitter can be S-PCM, Z-PCM or PPM.

2. Plug the trainer cord into each transmitter's DSC jack. Note each transmitter will appear to be ON, but neither is actually transmitting at this time.

3. Switch the master transmitter ON. **Do not switch on the slave transmitter**; you must only have the master transmitter ON.

4. Pull the trainer switch on the master transmitter toward you to transfer control to the slave. Releasing the switch automatically reverts control to the master transmitter.

5. Be sure the slave transmitter servo reversing, dual rates, and point adjustment and trims are identical to the master transmitter. This can be checked by pulling the trainer switch toward you. If the control surfaces move, adjust the slave transmitter until the trainer switch can be activated without a change of the control surface position.

A. Using the Normal Trainer System

In this mode, all functions are switched from the master to the slave using the trainer switch. This is the normal mode. No function set-up (reversing switch or travel adjust) is necessary to activate this system.

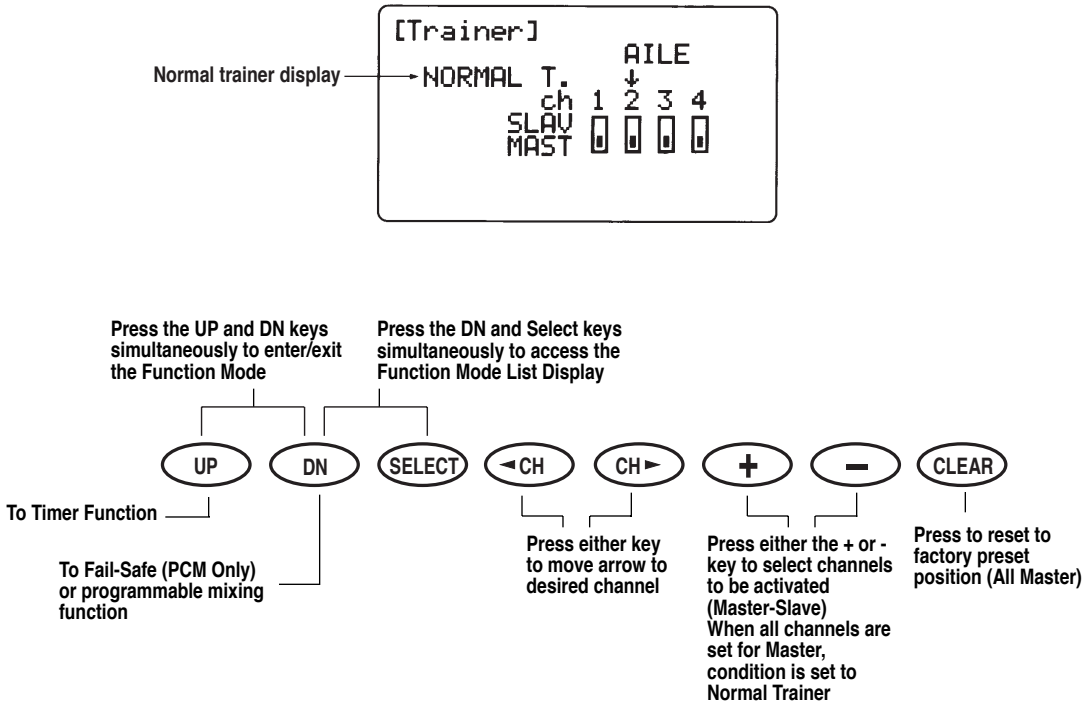

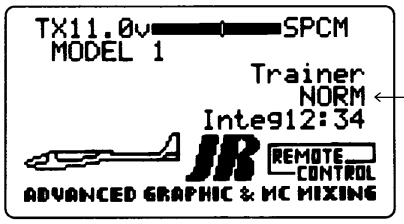

The normal display screen will show the type of trainer function selected once the trainer function is activated

B. Use of Programmable Trainer Function

In this mode, the master may assign functions to the student one at a time to make learning to fly easier. For example, the master may assign the slave rudder and elevator. Then, when the trainer switch is activated (pulled toward you), the slave has control of only rudder and elevator while the master retains control of throttle and aileron.

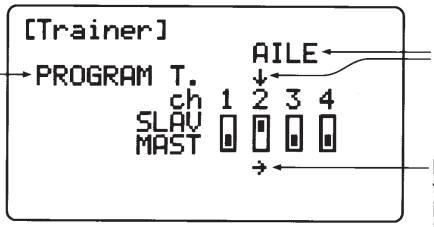

programmable trainer display

Channel display being programmed

If an arrow appears on the Master transmitter in this position, it indicates the direction the Slave channel trim lever must be moved on the Slave transmitter

SLAV: Applicable channel set to Slave
MAST: Applicable channel to Master

4.17 Timer (Function Mode)

The XP8103 offers two separate types of timer functions — countdown and stopwatch. In the countdown mode, the transmitter will beep at 30 seconds. At zero, the time will begin counting up with a + indication. Up count will count up to 59:59 (59 minutes 59 seconds).

Count start and stop operations are activated by the snap roll/ trainer switch. But when using it as the trainer's master transmitter, start/ stop by this switch is inhibited.

Accumulated Time (Integrated)

Accumulated time is for each model and returns to zero at 100 hours. You can use them as individual model's maintenance hours.

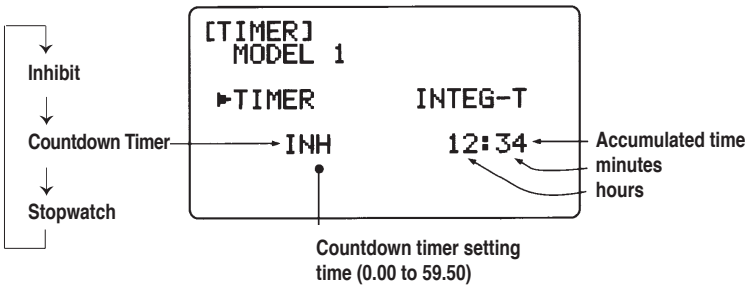

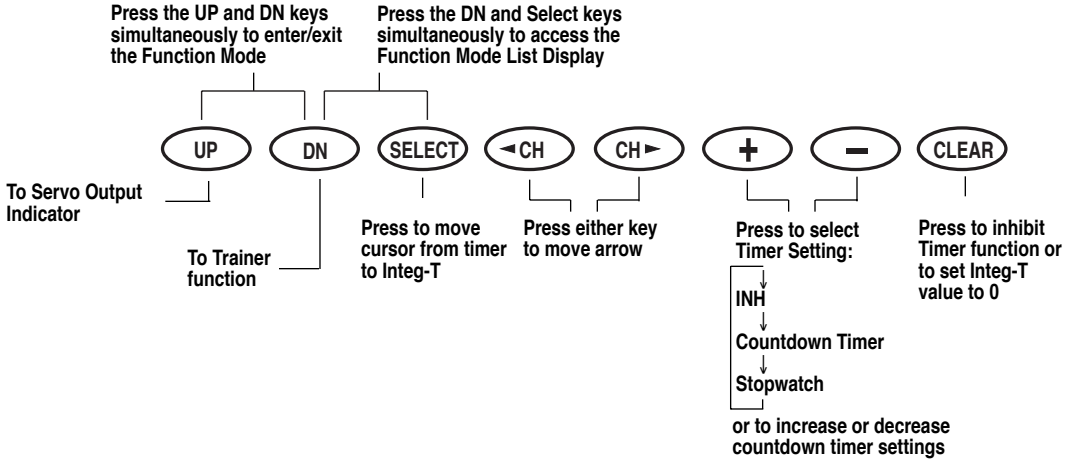

NORMAL DISPLAY w/countdown timer function selected

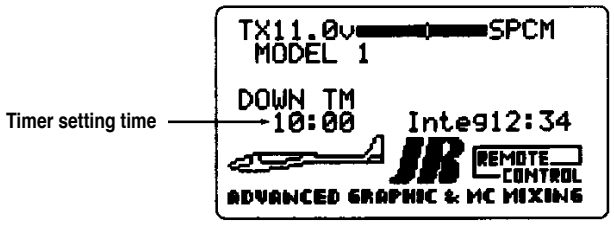

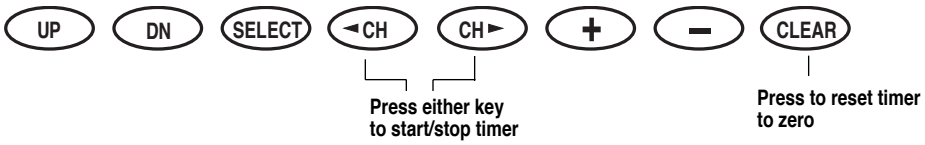

4.18 Servo Output Indicator (Function Mode)

This function displays each servo's operating value. Each bar center indicates neutral position. Left or right dots indicate 50%, 100% and 150%.

Note: All indications are actual positions including adjustments and mixing. It is also possible to view servo travel/ servo directions when mixing functions are activated.

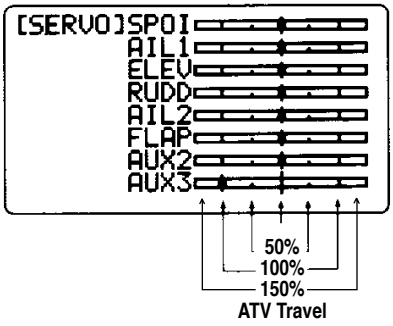

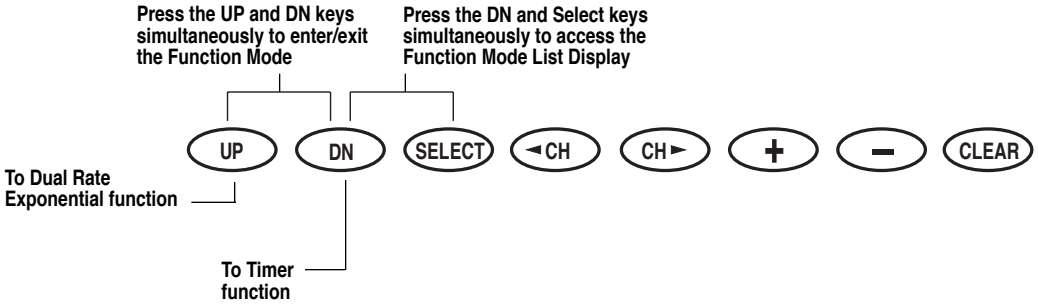

5. Practical Applications

5.1 Setting Up Your Sailplane

XP8103 Program and Mix Applications

This section outlines the procedures and suggested basic mechanical set-up for gliders using a six servo flight system with each flap and aileron driven by a dedicated servo. The following will be outlined:

A. Basic Mechanical Set-Up and Mixing (Aileron Differential and Coupled Aileron-Rudder)

B. Presets (Launch and Reflex)

C. Landing Model Programming

D. Full Span Variable Camber Mixing

E. Special Mixes — TE Droop with Elevator Up, Reflex with Elevator Down and Snap Flaps.

Note: If you are using a 5-servo installation with a single flap servo, all procedures will be similar.

5.2 Basic Set-Up and Mixing

Servo Installation

In preparing your glider wings for servo installation, some advance planning will make the set-up and programming of the XP8103 much easier. The following basic ground rules will speed this process:

1. It is necessary that all wing-mounted servos be installed with the output shaft facing outward toward the wing tips.

2. Before you begin programming, it is important to set up the transmitter for multi-function sailplane use. To do this:

A. Turn the transmitter ON while you simultaneously hold the UP and DN keys to enter the System Mode. Using the UP key, move to WING TYPE. Now press the UP and DN keys simultaneously to enter the Wing Type Function. Press the CH key to move the cursor arrow to the dual flap position. Press the L/ + key to activate the dual flap function.

B. With the UP key, move the display to INPUT SELECT and press the + key to change the display to FLAP SW +P6.

C. Press the UP and DN keys simultaneously twice to move to the Function Mode. Use the UP key to move through the functions to the display that reads [D/ FlapT.]. Use the + key to change the display to POT.5 INH. Press the CH key and repeat for POT.6 and POT.7. This deactivates the three pots on the transmitter to eliminate any inadvertent changes to the flap and aileron position.

3. Use the UP key to move the display to REVERSE SW. Check the movement of all servos and adjust the servo direction for all surfaces.

4. Use the UP key again to move to the S.TRIM (Sub-Trim Function). With the SEL key, move to the next screen and with the CH key move the cursor arrow to FLAP and AUX2 and adjust in the direction that moves the servo arms so that they raise the flaps. (Suggested values: FLAP U-90; AUX2-90.)

5. With all trims in neutral, the aileron servo arms should angle forward 20-30 degrees (see illustration below). This allows for more up throw mechanically. The flap servo arms should be angled slightly to the rear or vertically (see illustration at below). These set-ups should be the same on each wing as symmetry here helps in programming the landing mode and camber (which will be explained later).

6. In setting up the aileron differential, it is best to use the end-point adjustment in the TRVL ADJ Program 3 or 4:1 differential is generally used on most aileron equipped gliders. Many pilots will program as much up-aileron as possible and 1/ 8" to 1/ 4" down-aileron as a starting point.

7. The XP8103 has an aileron/ rudder mix [AILE-RUDD MIX]. No values are set in this program. Use the UP key to move through the Function Modes to AILE-RUDD MIX. Use the CH key to move to SW. If you want aileron/ rudder coupling at all times, use the + key to move the display to ON. To turn this mix OFF for aerobatics, etc., move the display to MIX. This will allow you to use the mix switch located at the right, top-rear of the transmitter to turn the aileron/ rudder coupling ON and OFF. To set the amount of coupling, use the CH key to move the cursor arrow to Rate:. Now adjust the value on the display to the desired amount of rudder movement in the proper direction.

Aileron Servo Arm Angle

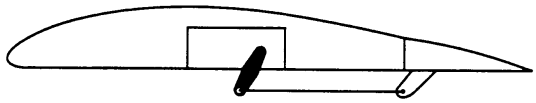

Flap Servo Arm Angle

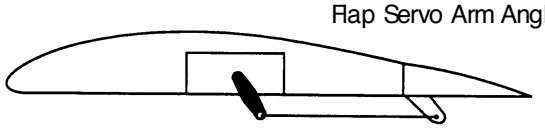

5.3 Launch and Reflex Presets

In the initial set-up of your XP8103 transmitter, if you set the flap control preference to SW+P6, the set-up of your Launch (and Reflex) presets is partially done for you.

Launch Preset

1. Pull the preset switch down to the launch preset position. This will droop the flaps down further than ideal for most launch situations. Move to the TRVL ADJ (Endpoint adjustment) portion of your Function Mode settings. With the SEL and CH key, move to the flap channel. Reduce the value shown on the display until you get the amount of flap throw desired for launch. You need only adjust the flap channel as the AUX2 channel should follow automatically in Dual Flap Mode. This change in value should not affect the flap throw in Landing or Camber (crow) Mode.

2. Aileron/ camber should automatically be mixed into this launch preset if you have chosen the FLP-D switch for the flap/ aileron mix. You may have to fine tune the aileron down throws.

3. If you wish to add some elevator up-trim to your launch preset, use the UP key to move to FLAP-ELEV MIX. Use the CH key to SW and set with the data keys to F-U+D. Move to the Rate display and add the desired amount of up elevator for launch preset. Leave the offset for this mix at 0.

Trailing Edge Reflex Preset

The preset for Trailing Edge Reflex does not require the use of the programmable mixes in the XP8103 if you are using the SW+P6 Function for your flaps.

1. Position the flap switch in the reflex (UP) position. This will make the flaps raise. Move to the TRVL ADJ (Endpoint adjustment) portion of the Function Mode and adjust the flap up travel to the desired amount of reflex.

2. To set the ailerons for reflex, use the UP key to move to the FLAP-AILE MIX display. Use the CH key to move to SW: and set to F-U+D. Move to Rate: with the CH key and adjust the value to raise the ailerons to match flaps. You may have to fine tune by adjusting the aileron travel through the Travel Adjust (Endpoint Adjustment Function) to achieve a straight line along the entire trailing edge.

3. If you wish to automatically adjust elevator trim in the reflex preset, move to the MIX F-E with the DN key. Make sure the switch select for this mix is F-U+D and adjust the elevator trim to the desired amount. (Generally, a slight amount of down is used for better penetration or increased speed.) Leave the offset for this mix at 0.

4. To automatically adjust the aileron/ rudder mix with the reflex preset (in many cases you may reduce the amount of mix), use the UP key to move to MIX E. Use the CH key to move to MIX E CH 1-1 and set the channels to 2-4 using the + and - keys. Use the CH key to move the display to MIX E SW. Use the UP key to select SW F-UP. Move the flap switch to the UP position, and use the CH key to move to the mix value display. The value will have to be set for both left and right movement of the aileron stick, and it will be a negative value — try around -10% to start. Leave the offset for this mix at 0.

5.4 Landing Mode Program

For gliders using flaps for glide path control, the following information will allow you to program the 8103 for precise spot landings and safe descent from high altitude.

All of the options and mix requirements for glide path control using flaps are incorporated into one portion of the software. For both landings and variable trailing edge crow (camber), you will use butterfly, which is part of the Function Mode. There are actually two modes (or set-ups) available. These are determined by the position of what is called the crow (camber)/ mix switch (more properly the landing/ camber switch), which is located at the left-top front of the transmitter. Landing position for this switch will be toward the rear of the transmitter (POS.1 in your display).

Using Butterfly will allow you to operate your flaps with crow (ailerons rising up as spoilerons, if you want), with automatic electronic elevator compensation all from the left stick (Mode II).

This function can operate at neutral flap with the left stick either up or down. However, the trim operates only with the stick at the bottom position. So, if you want to use the trim tab, neutral flap should be with the left stick down. The trim tab should stay in the center. The 8103 has a noticeable detent at center that is very easy to locate while flying.

1. In the Function Mode, use the UP key until the left side of the display reads Butterfly. Now use the CH key to move the cursor

arrow to SPOI OFFSET. With the trim tab centered and the left stick in position for neutral flap (low stick), press the CLR key to the right of the data keys. This stores your offset or neutral point.

2. Use the CH key and go to SPOI-FLAP. Using the + or - keys, program the mix value to give 90 degrees of flap throw. It may be necessary to return to TRVL ADJ (endpoint adjustment) to fine tune the flap throws and keep both surfaces even as they are lowered.

3. Use the CH key to move to SPOI-ELEV where you can now set your elevator compensation. The value may vary depending on the size and type of elevator used. A starting point for all flying stabilizers will be approximately 35% down; a fixed stabilizer with elevator will generally use a smaller percentage.

4. If you want to add crow (spoilerons), use the CH key to move to SPOI-AILE. With the data keys, set the mix value for the desired amount of up aileron (crow). This is an option that not all pilots will use, but it can be a very effective tool in helping to slow down for landing. Depending on the design of glider you are flying, anywhere from 5-45 degrees of crow (camber) can be useful.

This basic set-up will provide you with an effective landing mode for almost all conditions. The given values are only guidelines, and you will need to experiment and adjust them to your individual need and style.

5.5 Full Span/Variable Crow/Camber

The Full Span/ Variable Crow/ Camber Function also uses the Butterfly portion of the Function Mode. The purpose of this function is to allow you to vary the crow (camber) or position of the trailing edge of your wings' airfoil while flying, combined with the ability to adjust to variable flying conditions. To use this function, place the landing/ crow (camber) switch in POS.0, which is toward the face of the transmitter.

1. Use the Ch key to move the cursor to SPOI-FLAP. With the left stick moved to the full throw (down flap) position, adjust the mix value for approximately 1/ 4" to 3/ 8" down flap.

2. Leave the left stick in that position and use the CH key to move to SPOI-AILE. Use the data keys to move the ailerons down the same amount as the flaps. You may have to fine tune each aileron in the Endpoint Adjustment Function (TRVL ADJ) to get a straight line along the trailing edge.

3. If you want to change elevator trim as you add crow (camber), you can assign a value in SPOI-ELEV for this purpose.

4. If you have set the camber and the landing modes at neutral with the left stick in lower position where the trim tab will function, the trailing edge will reflex (move up) 2-3 degrees (in camber mode only) when the trim tab is moved down. For most modern glider airfoils, this is adequate for increased speed or penetration in wind.

The open programmable mixes available in the XP8103 allow you to enhance your presets with a variety of mix applications. Another programming feature included in the XP8103 is the ability to assign a switch to use for the following mixes: All programmable mixes, Elevator-Flaperons, Aileron-Flaperons, Flaperons-Elevator, and Flaperons-Aileron. In addition, the latter two mixes also include a trim offset for the flap.

Flaperons

Following are guidelines for mixing flaps to follow aileron movement. This mix will work as part of the Launch and/ or reflex preset at your option. The 8103 transmitter must have the dual flaps activated in the Function Mode to access the aileron/ flap mix.

1. In the Function Mode, use the UP key to move to the MIX AILE-FLAP mix. Now with the CH key, move to the switch select to select your switch option.

2. Move to Rate with the CH key and enter the value for throw. There is no separate mix value for each direction. There is no offset used with this mix.

Elevator Flap/Mix

The Elevator/ Flap Mix is another optional mix that can be used with either preset or other switch options. Different mix values are programmed for up and down elevator throw. This mix is generally used with slope aerobatics, or for multi-task speed and distance tasks.

1. From the aileron/ flap mix, use the DN key to move to ELEV-FLAP mix. Now push the CH key to move to switch select. In many multi-task applications, this mix will be used with reflex FLP-U.

2. Move back to Rate and enter for desired direction and throw. Most common is to drop the wing tailing edge with up Elevator.

Options and Program Ideas

With some time to experiment and learn the transmitter, you will discover a number of other ways to apply the above functions. If you fly with the aileron/ rudder mix always ON, the mix switch can be used as another switch option. The available programmable mixes also allow for a variety of scale and special-use functions.

Snap Flaps

Snap Flaps is a function that mixes a given amount of down flaps when a specified up elevator is given. This aids in tight turns and can be handy when circling in tight thermals or for changing direction quickly.

Select PROG. MIX 1 and mix ELEV-FLAP by pressing the + and - keys. Press the SEL key until the cursor arrow points to the Point L. Press the CLR key to clear out the mix value. Press the CH key until point H is displayed. Press the CLR key to zero out the H position. Press the CH key until Point 1 is displayed. Press the + key to achieve zero value in Point 1. Press the CH key until Point L is displayed. Then press the + or - key to achieve the desired amount of elevator to flap mixing with full up elevator.

Choose the switch position you want to turn off/ on this mix. Many pilots choose to leave this function on at all times.

XP8103 DATA SHEET GLID

MODEL NO. _____

MODEL NAME _____

MODULATION SPCM · ZPCM · PPM

	SPOI	AIL1	ELEV	RUDD	AIL2	FLAP	AUX2	AUX3
REVERSE SW	NORM · REV	NORM · REV	NORM · REV	NORM · REV	NORM · REV	NORM · REV	NORM · REV	NORM · REV
SUB TRIM								
TRAVEL ADJUST	+ %	L %	D %	L %	L %	U %	+ %	+ %
	− %	R %	U %	R %	R %	D %	− %	− %
FAIL-SAFE (SPCM · ZPCM)								

			AILE	ELEV	RUDD
DUAL RATE · EXP	0	D/R	%	%	%
		EXP	%	%	%
	1	D/R	%	%	%
		EXP	%	%	%
TRIM OFFSET					

DIFFERENTIAL	%

Butterfly MIX	0	→ELEV	%
		→AILE	%
		→FLAP	%
	1	→ELEV	%
		→AILE	%
		→FLAP	%
SPOILER Offset			

Wing Type	V-TAIL	INH · ACT
	DUAL FLAP	INH · ACT

INPUT SET (FLAP IN)	POT 6 · FLP SW + P6

ELEV→FLAP MIX	DOWN	%
	UP	%
	SW	

AILE→FLAP MIX	RATE	%
	SW	

FLAP→ELEV MIX	UP	%
	DOWN	%
	SW	
FLAP→AILE MIX	RATE	%
	SW	
FLAP OFFSET		

AILE→RUDD MIX	RATE	%
	SW	

DUAL FLAP TRIM	
POT 5	TRIM · INH
POT 6	TRIM · INH
POT 7	TRIM · INH

		CHANNEL	SW	EXP	L	1	2	3	H
PROGRAM MIX	MIX1	→		OFF · ON					
	MIX2	→		OFF · ON					
				+POS		−POS		OFFSET	
	MIX3	→		%		%			
	MIX4	→		%		%			
	MIX5	→		%		%			
	MIX6	→		%		%			

EXCLUSIVELY DISTRIBUTED BY HORIZON HOBBY DISTRIBUTORS, INC.

JR
feel the difference!

XP8103 Manual Addendum

Please refer to the info below for clarification before using these functions.
This information is applicable in all model types (Airplane, Helicopter, Glider).

Manual Page

Airplane 54 Helicopter 95 Glider 131

Timer (Function Mode)

The XP8103 offers two separate types of timer functions — countdown and stopwatch. In the countdown mode, the transmitter will beep at 30 seconds. At zero, the time will begin counting up with a + indication. Up count will count up to 59:59 (59 minutes 59 seconds).

Count start and stop operations are activated by the snap roll/ trainer switch. But when using it as the trainer's master transmitter, start/ stop by this switch is inhibited.

Accumulated Time (Integrated)

Accumulated time is for each model and returns to zero at 100 hours. You can use them as individual model's maintenance hours.

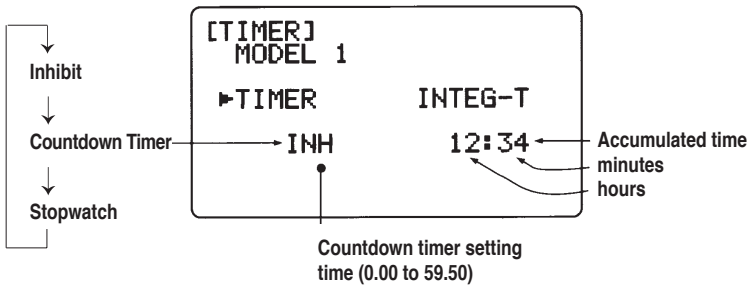

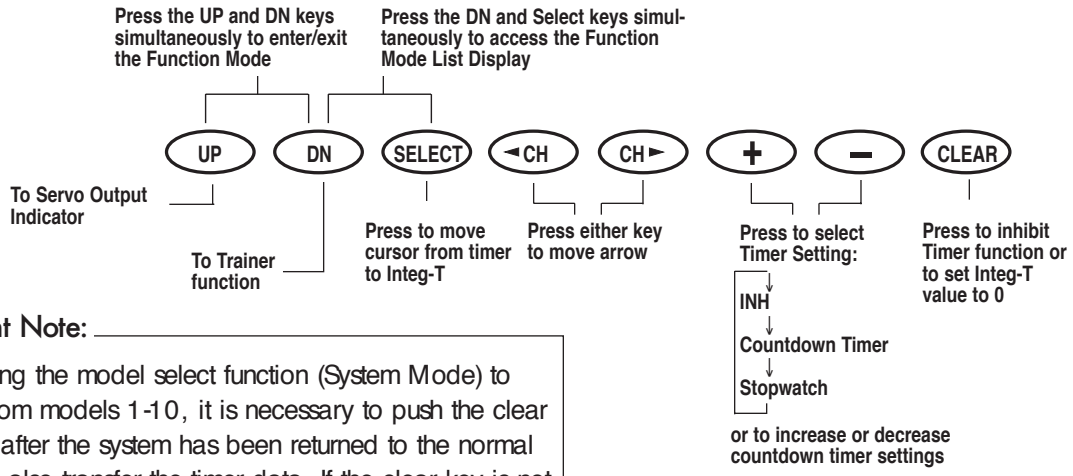

Important Note:

When using the model select function (System Mode) to change from models 1-10, it is necessary to push the clear key once after the system has been returned to the normal display to also transfer the timer data. If the clear key is not pressed, the time set for the current model will change to that of the time set for the *previously used model*.

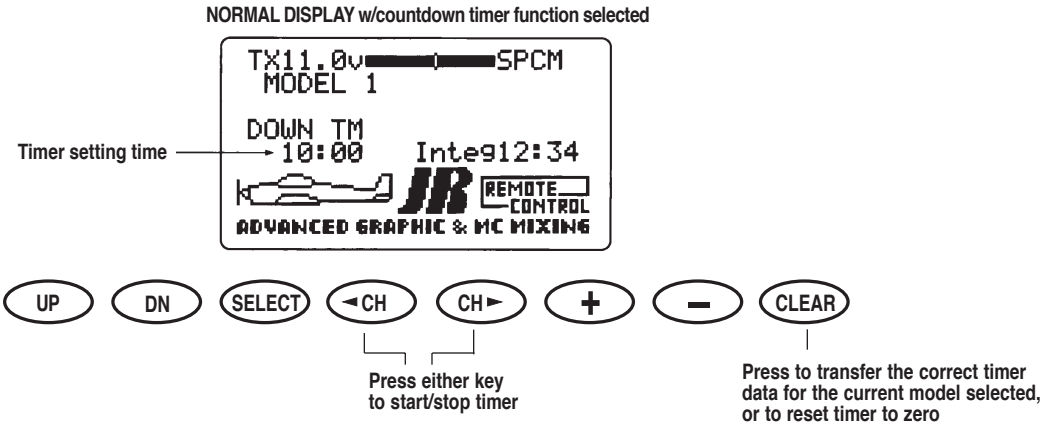

XP8103 Manual Addendum

Please refer to the info below for clarification before using these functions.
This information is applicable in all model types (Airplane, Helicopter, Glider).

Manual Page
Airplane 28 Helicopter 66 Glider 106

Model Select (System Set-Up Mode)

The XP8103 transmitter employs a memory function which memorizes data for up to 10 individual aircraft. All settings along with type selection, function, and different aircraft are used by one transmitter. For example, Model 1 is airplane and Model 2 is helicopter. To avoid confusing models, inputting model names for each aircraft is recommended (see page 29). Press the UP and DN keys simultaneously and turn the power switch ON to access the System Set-Up Mode.

The display below shows the model selection function.

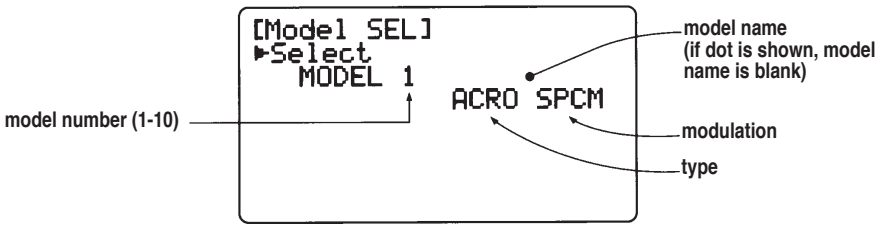

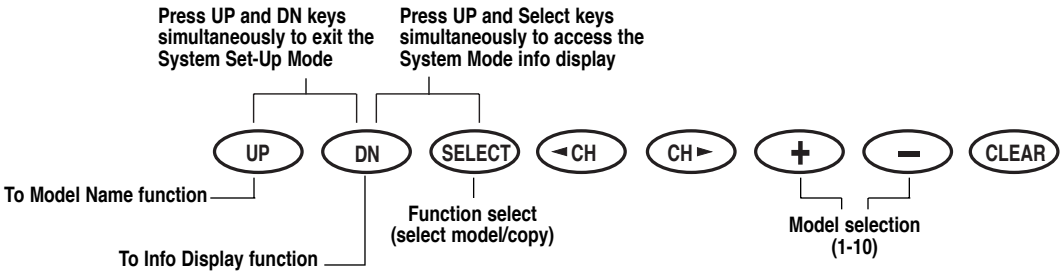

Timer Data Transfer:

It is necessary to press the clear key once after the system has been returned to the normal display to also transfer the timer data. If the clear key is not pressed after the model select function, the time setting from the current model will be changed to the time setting of the *previous model*.